产品编号 ： 334713301
Product Description ： MX150 Mat-Sealed Female Connector Assembly, Single Row, 3 Circuits, Keying Option A, Black
系列号 ： 33471
状态 ： Active
Product Category ： Connector Housings
工程编号 ： CVP33471-3301



文件和资源

图纸

图纸　334713301_sd.pdf
包装设计图　PK-31300-635-001.pdf

3D 模型和设计文件

3D模型　334713301_stp.zip

规格

应用规格　AS-33472-100-001.pdf
应用规格　AS-33472-100-CH-001.pdf
应用规格　AS-33611-001-001.pdf
应用规格　AS-34711-001-001.pdf
应用规格　AS-34711-001-CH-001.pdf

产物环境合规

合规

GADSL/IMDS	Duty-To-Declare
China RoHS	
EU ELV	Compliant per 2000/53/EC
Low-Halogen Status	Low-Halogen per IEC 61249-2-21
REACH SVHC	Not Contained per D(2023)3788-DC (14 Jun 2023)
EU RoHS	Compliant per EU 2015/863

多部分产品合规性声明

- Eu RoHS
- REACH SVHC
- Low-Halogen

多部分行业合规性文件

- IPC 1752A Class C
- IPC 1752A Class D
- Molex Product Compliance Declaration
- IEC-62474
- chemSHERPA (xml)

欧盟 RoHS 合格证书

产品详情

常规

状态	活动
类别	Connector Housings
系列	33471
说明	MX150 Mat-Sealed Female Connector Assembly, Single Row, 3 Circuits, Keying Option A, Black
应用	Power, Wire-to-Wire
个评论	No Connector Position Assurance (CPA)
产品系列	MX150 Sealed and Unsealed Connector System
产品名称	MX150
UPC	191128449809

机构

UL	E29179

物理

电路数（最多）	3
颜色-树脂	黑色
性别	Receptacle
符合灼热丝规范	否
插接极性	是
锁定插接部位	是

材料 - 树脂	SPS/Nylon
净重	7.700/g
行数	1
包装形式	Bag
面板安装式	否
间距 - 插配接口	3.50mm
有极性的插配件	是
可堆叠的	否
运行温度范围	-40° to +125° C

可配插/可连接使用的产品

可配插部件

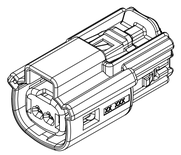
描述	产品编号
MX150 Mat-Sealed Single Row Male Connector Assemblies	33481

可连接使用部件

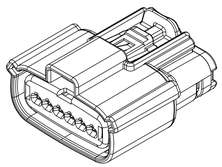
描述	产品编号
MX150 Sealed Receptacle Cavity Plug	/content/molex/molex-dot-com/cn/zh/products/product-page.html/343454001.html
MX150 Backshell for Male Sealed Connector Assembly, 6 Circuit, with Rib	/content/molex/molex-dot-com/cn/zh/products/product-page.html/349500610.html
MX150 Backshell for Male Sealed Connector Assembly, 6 Circuit, without Rib	/content/molex/molex-dot-com/cn/zh/products/product-page.html/349500620.html
MX150 Female Terminals	33001
MX150 Female Terminals	33012

TABLE OF CONTENTS

SHEET NO.	SHEET DESCRIPTION
1	NOTES AND BOM
2	CONFIGURATIONS
3-4	KEY CONFIGURATIONS
5	RECEPTACLE CONNECTOR ASSEMBLY
6	BACKSHELL NOTES
7	BACKSHELL
8	BACKSHELL CONFIGURATIONS



1x2



1x6

NOTES: VALID UNLESS OTHERWISE SPECIFIED

1. GENERAL:
a. APPLICATION SPECIFICATION SEE: AS-33472-100
-CONTAINS: PRODUCT INTRODUCTION, PRODUCT SUMMARY, CONNECTOR ASSEMBLY, PACKAGING INFORMATION, CONNECTOR MATING, SERVICE INSTRUCTIONS, ELECTRICAL CONTINUITY CHECKING, CRIMPING, AND TROUBLESHOOTING.
-DESIGNED TO MATE WITH DEVICE OR CONNECTOR AS SPECIFIED IN THE MATING INTERFACE/CONNECTOR DRAWINGS CHART.
*DENOTES DRAWINGS THAT CAN BE ACCESSED AT <http://ewcap.uscarteams.org/>.
-ASSEMBLY SHIPPED WITH PLR IN PRE-LOCK POSITION (SEE PLR PRE-LOCK VIEW SHEET 5).
b. PRODUCT SPECIFICATION SEE:
-STANDARD CONFIGURATION: PS-33471-000
-UL V0 CONFIGURATION: PS-160105-0001
CONTAINS: PRODUCT INTRODUCTION, PRODUCT SUMMARY, RATINGS (CURRENT, TEMPERATURE, SEALING, AND FLAMMABILITY), TERMINALS, WIRE DIAMETER RANGE, PRODUCT VALIDATION, AND PRODUCT DEVIATIONS.
c. PACKAGING SPECIFICATION PER MOLEX DRAWING: SEE PACKAGING CHART
d. PARTS MUST BE IN COMPLIANCE TO MOLEX CHEMICAL SUBSTANCES FOR PRODUCTS AND PACKAGING SPECIFICATION: QEHS-699000-301
e. DATA MUST BE SUBMITTED UNDER THE MOLEX PART NUMBER TO IMDS (COMPANY ID#13255)

2. DESIGN - MATERIALS:
a. FOR BILL OF MATERIALS SEE:
-STANDARD CONFIGURATION SD-33471-0002
-UL V0 CONFIGURATION SD-160105-0002

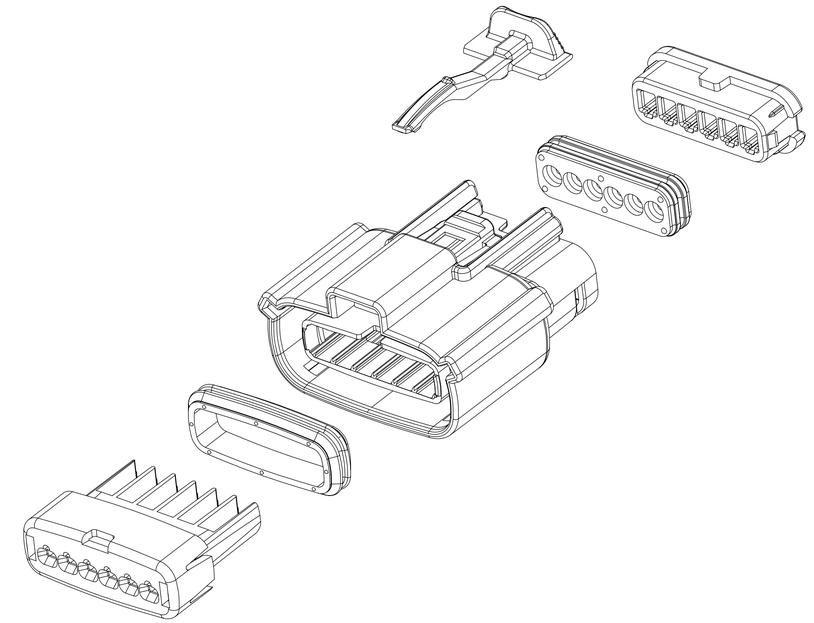
3. DESIGN - GEOMETRY:
a. THE 3-D CAD DATA IS BASIC (WITHOUT TOLERANCE) AND MASTER FOR THIS PART WITH THE EXCEPTION OF UNDERLINED DIMENSIONS. DIMENSIONAL INFORMATION NOT SHOWN ON THIS DRAWING IS DEFINED BY THE DATA FILE AT ITS LATEST REVISION.
b. GEOMETRIC DIMENSIONS AND TOLERANCES PER ASME Y14.5M-2009
c. EDGES AND UNDIMENSIONED DETAILS PER ISO13715
d. CORNERS SHOWN AS SHARP TO BE R 0.2 MAX.
e. LETTERING SHALL BE 0.15 MAX RAISED IN 0.25 MAX RECESS PAD. THIS INCLUDES RECYCLING CODE, CAVITY ID, VENDOR IDENTIFICATION, AND CUSTOMER MATERIAL NUMBER.
f. VISUAL DEFECTS SHALL MEET COSMETIC STANDARD PS-45499-002 (Class B).
g. LASER MARKING:
1. PART NUMBER
2. DAY OF THE YEAR
3. SHIFT
4. YEAR
FOR ADDITIONAL INFORMATION SEE SECTION 5 UNDER PROCEDURES IN ES-34735-008.

PACKAGING

DESCRIPTION	DRAWING NO.
1X2	PK-31300-635
1X6	PK-31300-903

MATING INTERFACE/CONNECTOR DRAWINGS

DESCRIPTION	INTERFACE DEFINITION	MOLEX INLINE
1X2	*150-S-002-1-Z05	SD-33481-0001
1X6	*150-S-006-1-Z03	SD-33481-0001



REV	REV DESCRIPTION
A1	UPDATED THE DRAWING FRAME
A	MINOR GEOMETRY CHANGE FOR UL V0
2	UPDATE VIEWSETS
1	INITIAL RELEASE

INSPECTION NUMBER LOG
LAST NUMBER: 11
ADDED: 11
REMOVED:

THIS DRAWING CONTAINS INFORMATION THAT IS PROPRIETARY TO MOLEX ELECTRONIC TECHNOLOGIES, LLC AND SHOULD NOT BE USED WITHOUT WRITTEN PERMISSION

FUNCTIONAL SYMBOLS
FA = 0
FC = 0
FD = 0
DIVISIONAL SYMBOLS

DIMENSION UNITS	SCALE
mm	1.5:1

GENERAL TOLERANCES (UNLESS SPECIFIED)

ANGULAR TOL	±	1.0 °
4 PLACES	±	
3 PLACES	±	
2 PLACES	±	0.1
1 PLACE	±	0.2
0 PLACES	±	

DRAFT WHERE APPLICABLE MUST REMAIN WITHIN DIMENSIONS

CURRENT REV DESC:

EC NO: 643941
DRWN: XLDONG03 2020/08/21
CHK'D: JDENG02 2020/08/26
APPR: JDENG02 2020/08/26

INITIAL REVISION:
DRWN: APROFFITT 2015/11/04
APPR: KDEKOSHI 2016/06/14

molex

MX150 RCPT
SINGLE ROW SEALED ASSY MAT SEAL

PRODUCT CUSTOMER DRAWING

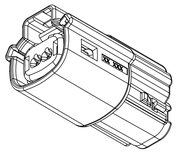
DOCUMENT NUMBER	DOC TYPE	DOC PART	REVISION
SD-33471-0001	PSD	001	A1

THIRD ANGLE PROJECTION	DRAWING	SERIES	MATERIAL NUMBER	CUSTOMER	SHEET NUMBER
	D-SIZE	33471	SEE NOTE 2a	GENERAL MARKET	1 OF 8

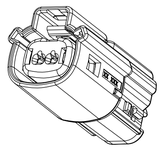
DOCUMENT STATUS	P1	RELEASE DATE	2020/08/26 07:23:52

SHEET DESCRIPTION

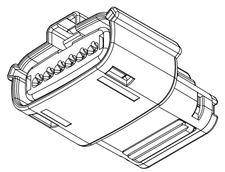
CONFIGURATIONS



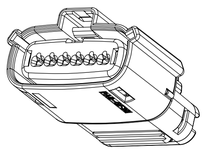
1x2 - STD



1x2 - UL V0*



1x6 - STD



1x6 - UL V0*

*MINOR GEOMETRY DIFFERENCE THAN STANDARD CONFIGUATION
SEE NOTES 1 & 2 FOR MORE INFORMATION

DOCUMENT STATUS	P1	RELEASE DATE	2020/08/26 07:23:52

FUNCTIONAL SYMBOLS	
FA =	0
FC =	0
FD =	0
DIVISIONAL SYMBOLS	

THIS DRAWING CONTAINS INFORMATION THAT IS PROPRIETARY TO MOLEX ELECTRONIC TECHNOLOGIES, LLC AND SHOULD NOT BE USED WITHOUT WRITTEN PERMISSION

DIMENSION UNITS	SCALE
mm	1.5:1

GENERAL TOLERANCES (UNLESS SPECIFIED)

ANGULAR TOL	±	1.0 °
4 PLACES	±	
3 PLACES	±	
2 PLACES	±	0.1
1 PLACE	±	0.2
0 PLACES	±	

DRAFT WHERE APPLICABLE MUST REMAIN WITHIN DIMENSIONS

CURRENT REV DESC:

EC NO: 643941
DRWN: XLDONG03 2020/08/21
CHK'D: JDENG02 2020/08/26
APPR: JDENG02 2020/08/26

INITIAL REVISION:
DRWN: APROFFITT 2015/11/04
APPR: KDEKOSKI 2016/06/14

THIRD ANGLE PROJECTION | DRAWING: D-SIZE | SERIES: 33471

molex

MX150 RCPT
SINGLE ROW SEALED ASSY MAT SEAL

PRODUCT CUSTOMER DRAWING

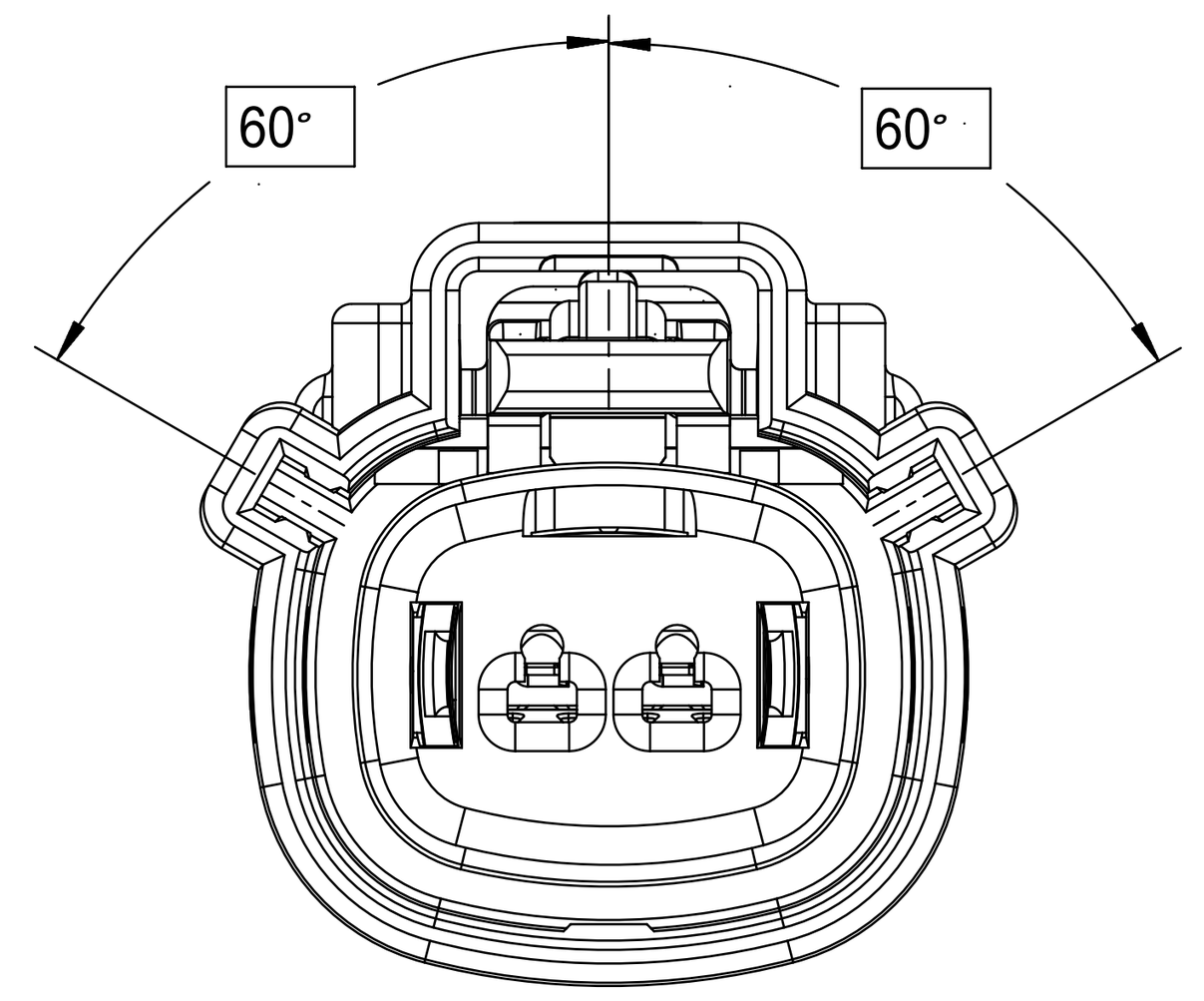
DOCUMENT NUMBER	DOC TYPE	DOC PART	REVISION
SD-33471-0001	PSD	001	A1

MATERIAL NUMBER	CUSTOMER	SHEET NUMBER
SEE NOTE 2a	GENERAL MARKET	2 OF 8

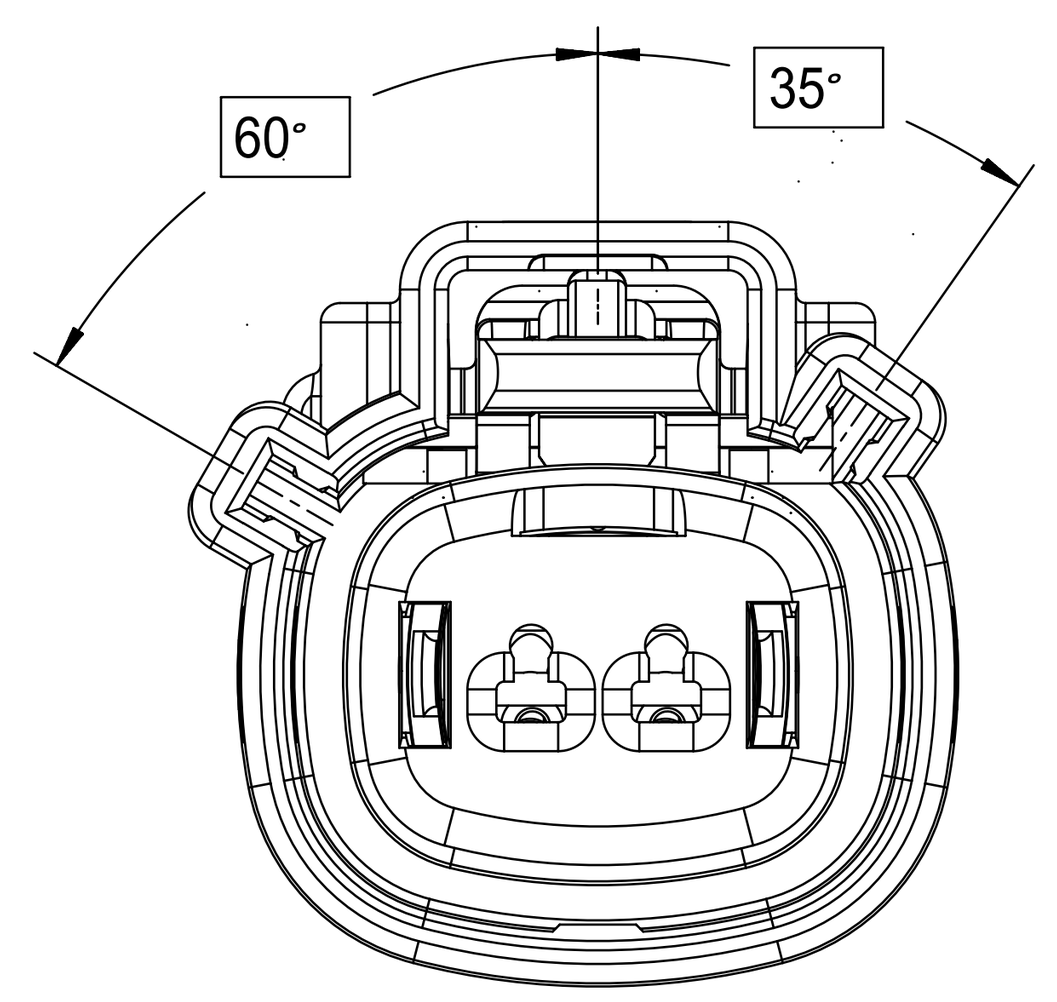
SHEET DESCRIPTION

KEY CONFIGURATIONS

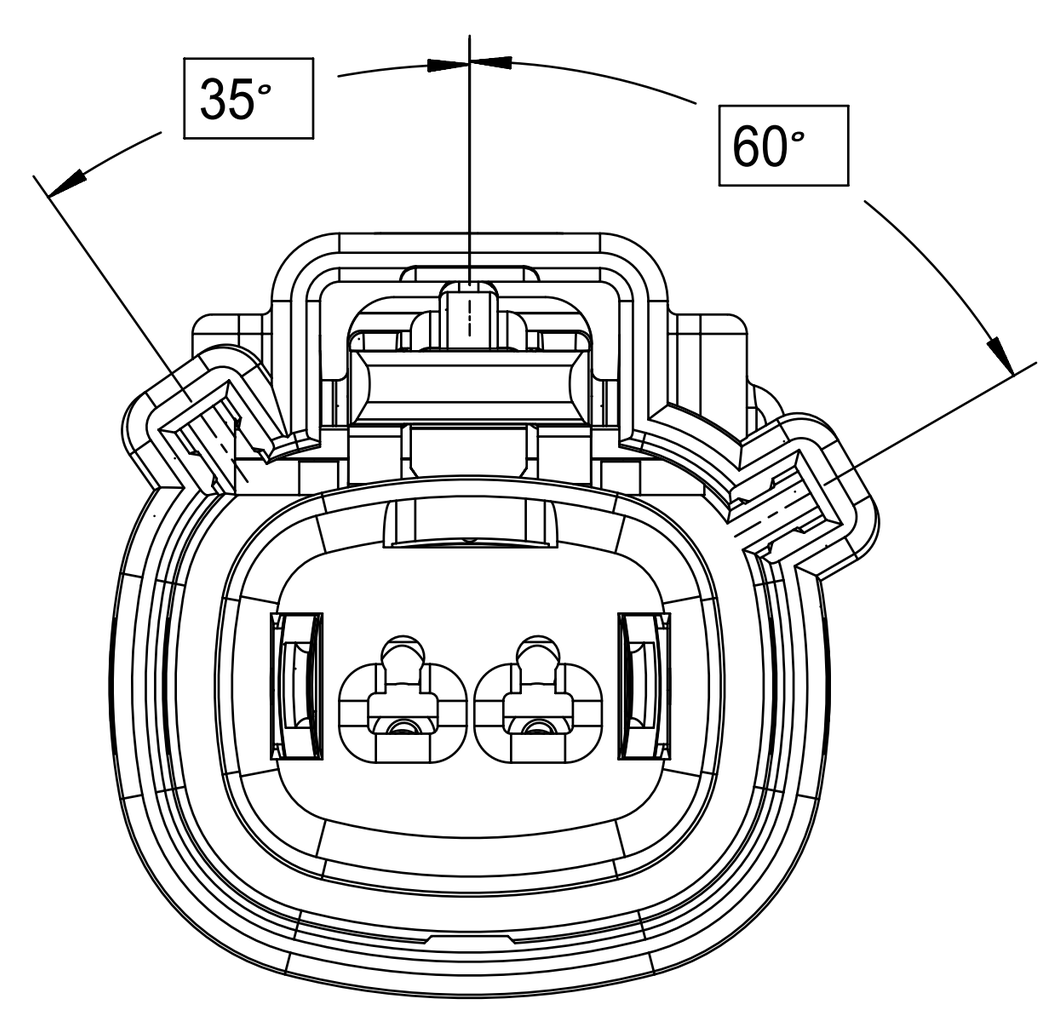
1X2



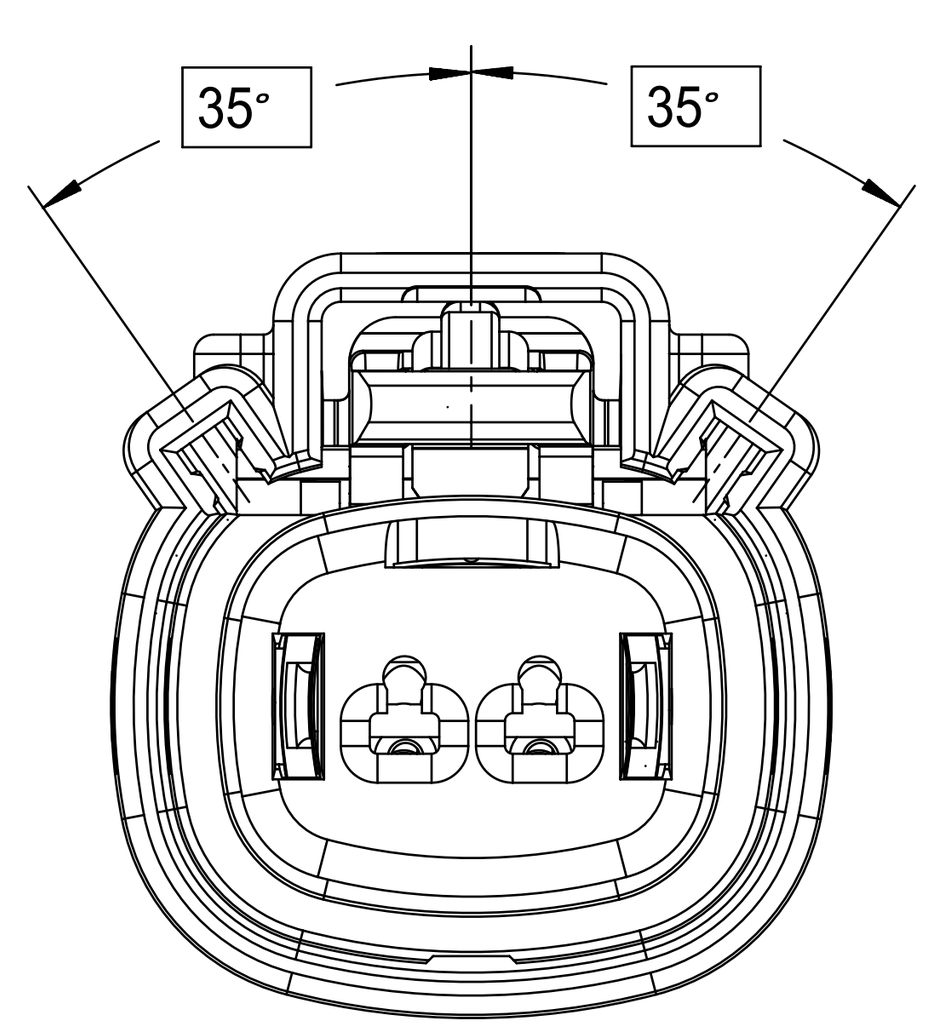
KEY A



KEY B



KEY C



KEY D

THIS DRAWING CONTAINS INFORMATION THAT IS PROPRIETARY TO MOLEX ELECTRONIC TECHNOLOGIES, LLC AND SHOULD NOT BE USED WITHOUT WRITTEN PERMISSION

FUNCTIONAL SYMBOLS

- A = 0
- C = 0
- P = 0

DIVISIONAL SYMBOLS

DIMENSION UNITS	SCALE
mm	3:1

GENERAL TOLERANCES (UNLESS SPECIFIED)

ANGULAR TOL	±	1.0 °
4 PLACES	±	
3 PLACES	±	
2 PLACES	±	0.1
1 PLACE	±	0.2
0 PLACES	±	

DRAFT WHERE APPLICABLE MUST REMAIN WITHIN DIMENSIONS

CURRENT REV DESC:

EC NO: 643941

DRWN:	XLDONG03	2020/08/21
CHK'D:	JDENG02	2020/08/26
APPR:	JDENG02	2020/08/26

INITIAL REVISION:

DRWN:	APROFFITT	2015/11/04
APPR:	KDEKOSKI	2016/06/14

THIRD ANGLE PROJECTION	DRAWING	SERIES
	D-SIZE	33471

molex

MX150 RCPT
SINGLE ROW SEALED ASSY MAT SEAL

PRODUCT CUSTOMER DRAWING

DOCUMENT NUMBER	DOC TYPE	DOC PART	REVISION
SD-33471-0001	PSD	001	A1

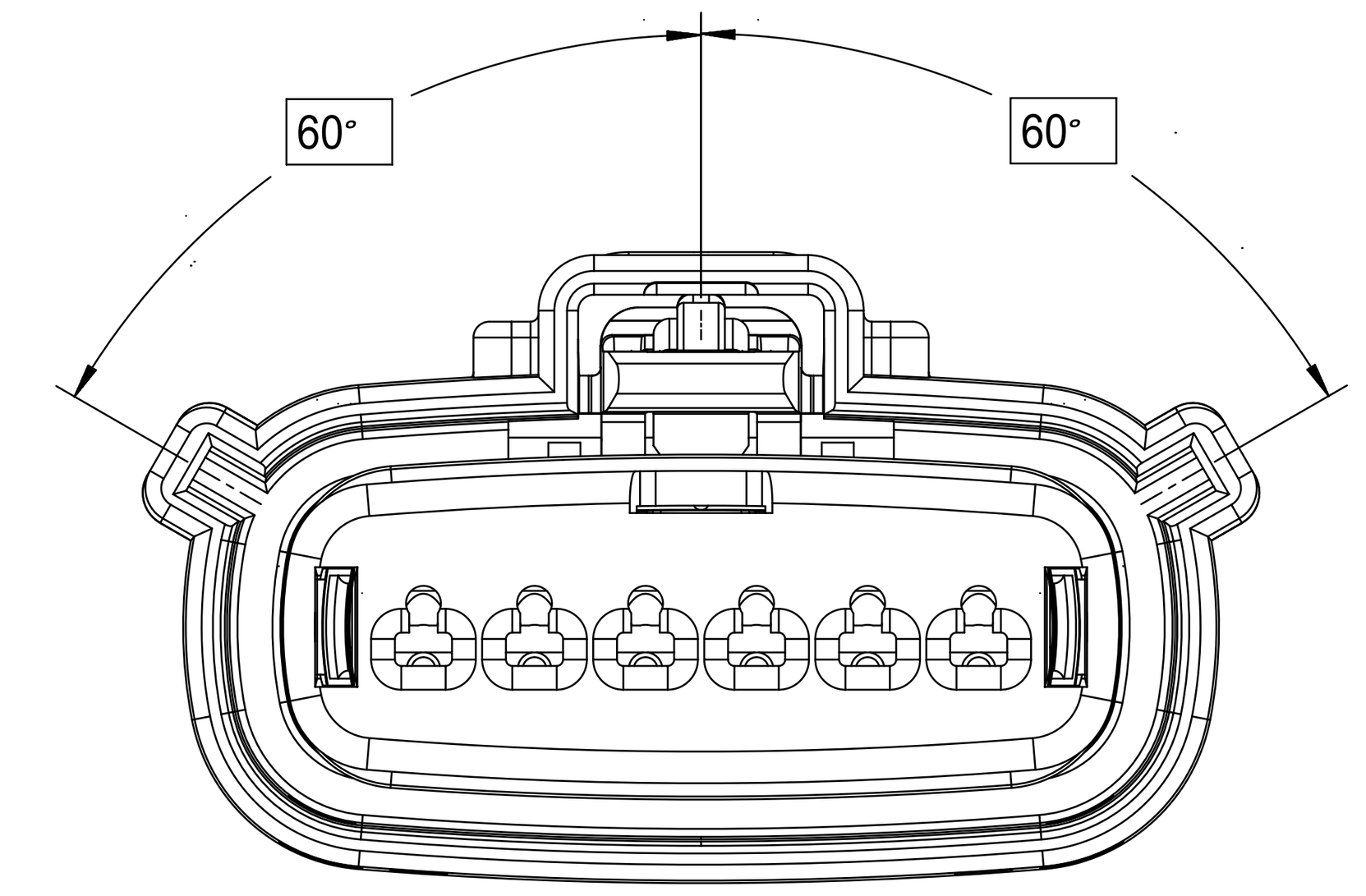
MATERIAL NUMBER	CUSTOMER	SHEET NUMBER
SEE NOTE 2a	GENERAL MARKET	3 OF 8

DOCUMENT STATUS	P1	RELEASE DATE	2020/08/26	07:23:52

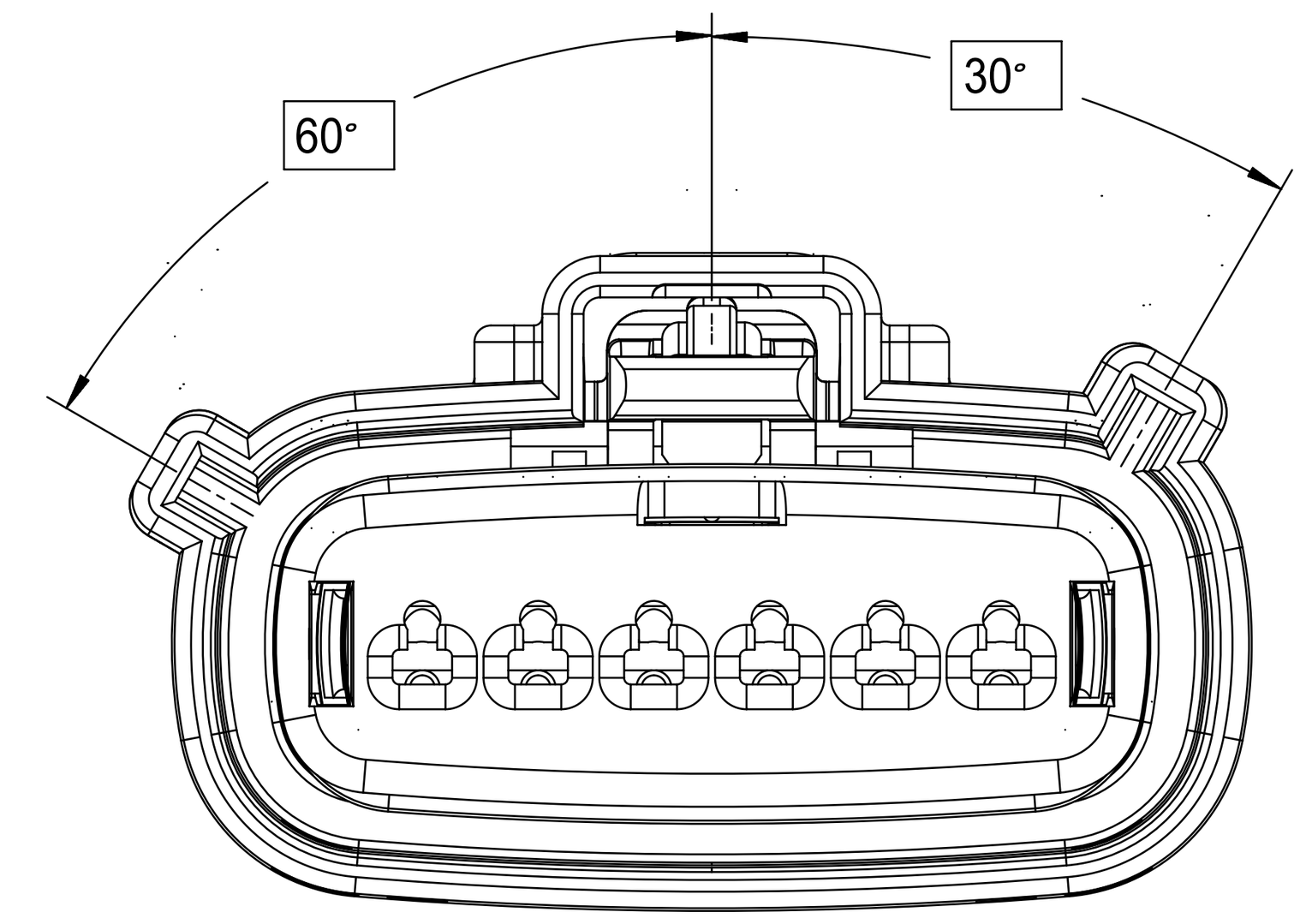
SHEET DESCRIPTION

KEY CONFIGURATIONS CONT.

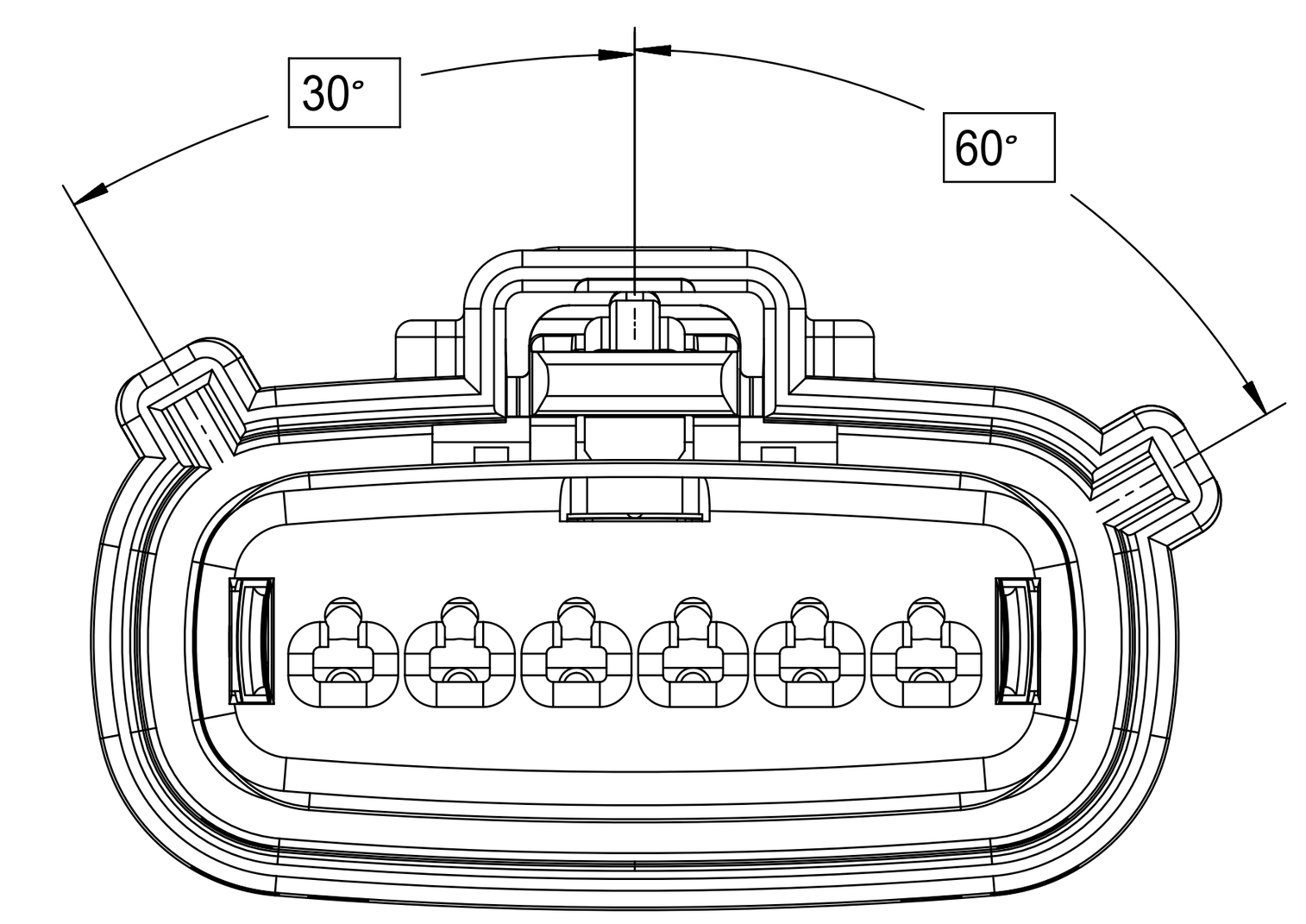
1X6



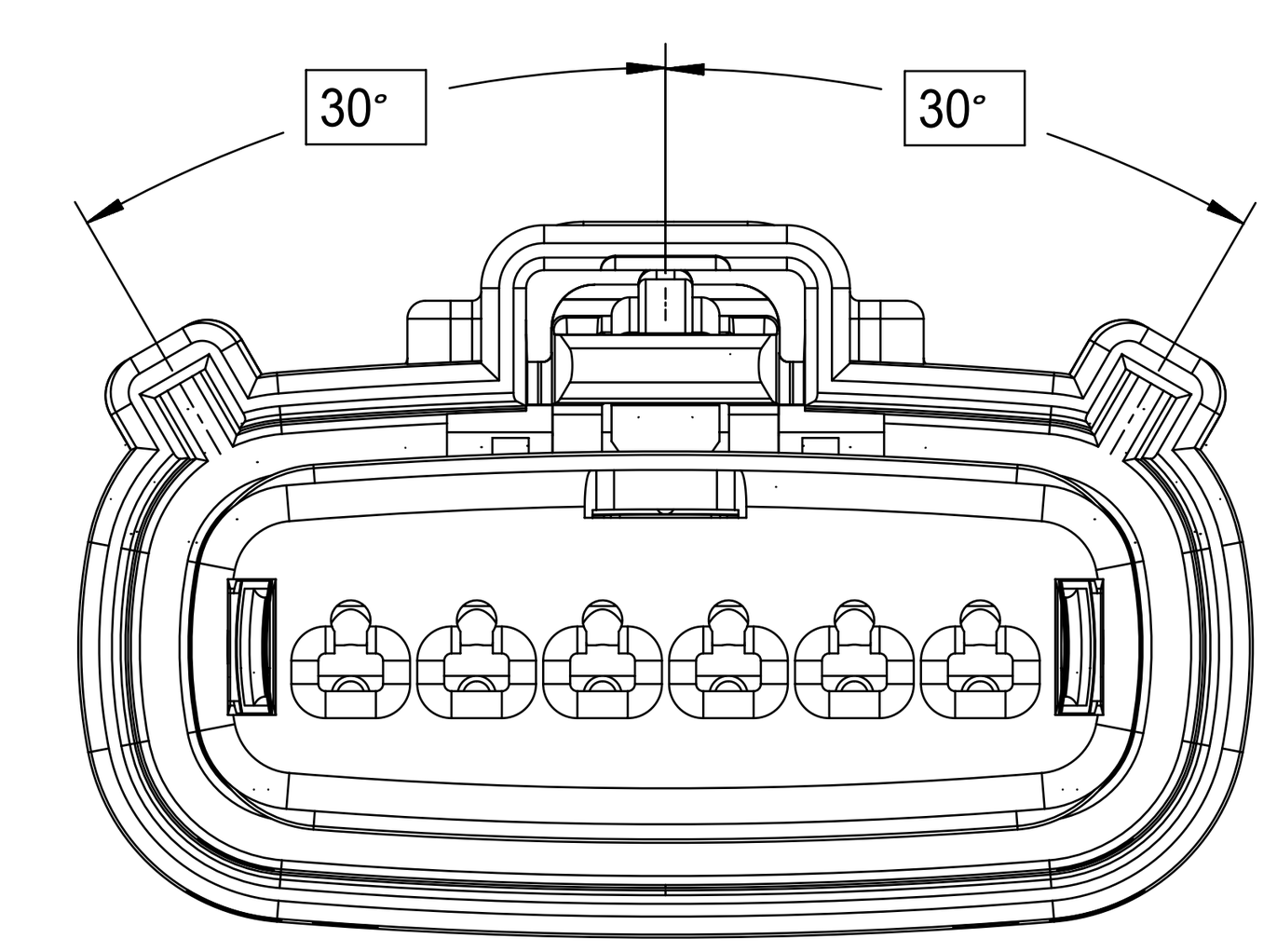
KEY A



KEY B



KEY C



KEY D

THIS DRAWING CONTAINS INFORMATION THAT IS PROPRIETARY TO MOLEX ELECTRONIC TECHNOLOGIES, LLC AND SHOULD NOT BE USED WITHOUT WRITTEN PERMISSION

FUNCTIONAL SYMBOLS	DIMENSION UNITS	SCALE
= 0	mm	3:1
= 0	GENERAL TOLERANCES (UNLESS SPECIFIED)	
= 0	ANGULAR TOL ±	1.0 °
	4 PLACES ±	
DIVISIONAL SYMBOLS	3 PLACES ±	
	2 PLACES ±	0.1
	1 PLACE ±	0.2
	0 PLACES ±	
	DRAFT WHERE APPLICABLE MUST REMAIN WITHIN DIMENSIONS	

CURRENT REV DESC:

EC NO: 643941
DRWN: XLDONG03 2020/08/21
CHK'D: JDENG02 2020/08/26
APPR: JDENG02 2020/08/26

INITIAL REVISION:
DRWN: APROFFITT 2015/11/04
APPR: KDEKOSKI 2016/06/14

THIRD ANGLE PROJECTION	DRAWING	SERIES
	D-SIZE	33471

molex

MX150 RCPT
SINGLE ROW SEALED ASSY MAT SEAL

PRODUCT CUSTOMER DRAWING

DOCUMENT NUMBER	DOC TYPE	DOC PART	REVISION
SD-33471-0001	PSD	001	A1

MATERIAL NUMBER	CUSTOMER	SHEET NUMBER
SEE NOTE 2a	GENERAL MARKET	4 OF 8

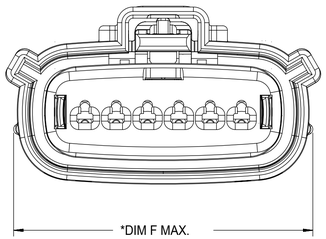
DOCUMENT STATUS	P1	RELEASE DATE	2020/08/26 07:23:52

SHEET DESCRIPTION

RECEPTACLE CONNECTOR ASSEMBLY - STD

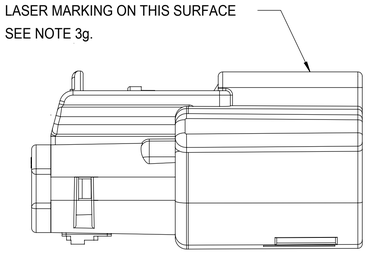
CHARTED DIMENSIONS

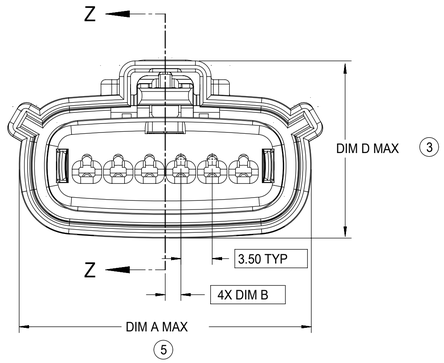
DESCRIPTION	DIMENSIONS					
	A	B	C	D	E	F
1X2	19.40	1.75	21.73	20.55	37.65	19.64
1X6	32.75	1.75	35.21	19.90	37.65	N/A
1X6 UL V0	N/A	1.75	35.23	19.90	37.65	33.64

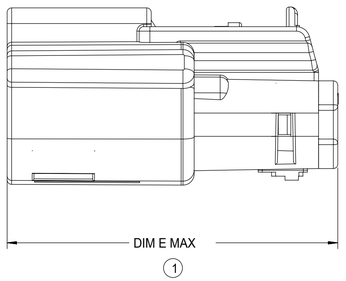


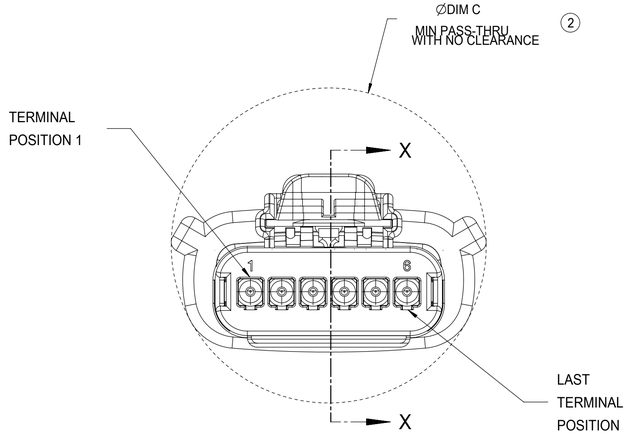
*APPLIE TO UL V0 CONFIGURATIONS ONLY

(11)

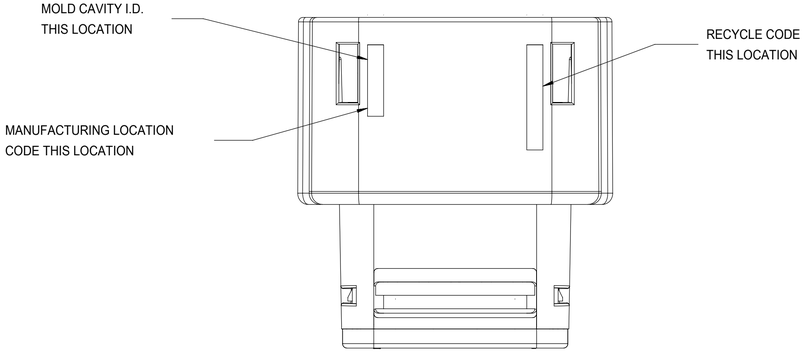


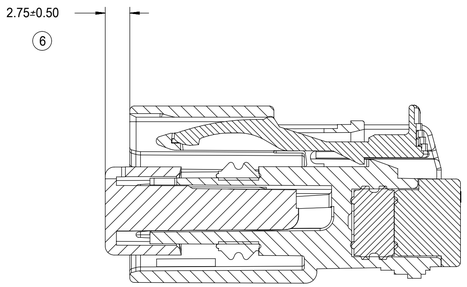






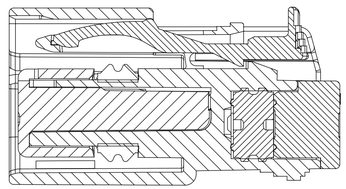
REAR VIEW
(WIRE HARNESS SIDE)





PRIMARY LOCK REINFORCEMENT (PLR) SHOWN
IN PRE-STAGED POSITION

SECTION Z-Z



PRIMARY LOCK REINFORCEMENT (PLR) SHOWN
IN FINAL-LOCK POSITION

SECTION X-X

DOCUMENT STATUS	P1	RELEASE DATE	2020/08/26 07:23:52

FUNCTIONAL SYMBOLS	THIS DRAWING CONTAINS INFORMATION THAT IS PROPRIETARY TO MOLEX ELECTRONIC TECHNOLOGIES, LLC AND SHOULD NOT BE USED WITHOUT WRITTEN PERMISSION		
FA = 0	DIMENSION UNITS: mm	SCALE: 3:1	CURRENT REV DESC:
FC = 0	GENERAL TOLERANCES (UNLESS SPECIFIED)		
FE = 0	ANGULAR TOL ± 1.0 °		EC NO: 643941
DIVISIONAL SYMBOLS	4 PLACES ±		DRWN: XLDONG03 2020/08/21
	3 PLACES ±		CHK'D: JDENG02 2020/08/26
	2 PLACES ± 0.1		APPR: JDENG02 2020/08/26
	1 PLACE ± 0.2		INITIAL REVISION:
	0 PLACES ±		DRWN: APROFFITT 2015/11/04
	DRAFT WHERE APPLICABLE MUST REMAIN WITHIN DIMENSIONS		APPR: KDEKOSKI 2016/06/14

molex

MX150 RCPT
SINGLE ROW SEALED ASSY MAT SEAL

PRODUCT CUSTOMER DRAWING

THIRD ANGLE PROJECTION	DRAWING	SERIES	MATERIAL NUMBER	CUSTOMER	SHEET NUMBER
	D-SIZE	33471	SEE NOTE 2a	GENERAL MARKET	5 OF 8

DOCUMENT NUMBER	DOC TYPE	DOC PART	REVISION
SD-33471-0001	PSD	001	A1

SHEET DESCRIPTION

BACKSHELL NOTES

BACKSHELL NOTES: VALID UNLESS OTHERWISE SPECIFIED

1. GENERAL:

a. APPLICATION SPECIFICATION SEE: AS-34951-001

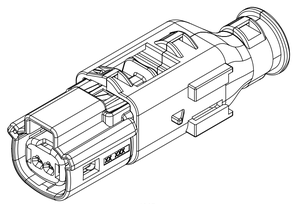
-DESIGNED TO MATE WITH RECEPTACLE SEALED ASSEMBLY
SPECIFIED IN MOLEX DRAWING SD-33471-0001.

-SYSTEM TO BE USED WITH WIRE WITHIN DIAMETER RANGE OF 1.2mm TO 2.69mm.

-COMPONENTS ARE OPTIONAL AND MUST BE PURCHASED SEPERATELY.

-BACKSHELL DESIGN IS OWNED BY SCHLEMMER.

-FOR ADDITIONAL INFORMATION SEE THE BACKSHELL COMPONENT DRAWING SD-34949-0001.

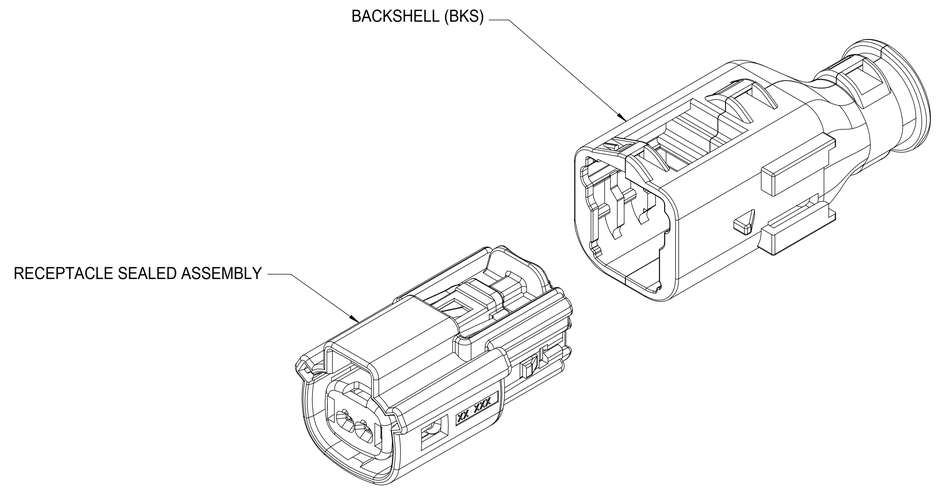


1X2

BACKSHELL CUSTOMER
MODEL NUMBER LEGEND

34949-XXXX

- CUSTOMER MODEL COMPONENTS
  - 0 - BACKSHELL ONLY
  - 1 - BACKSHELL & MX150 HOUSING KEY A ASSEMBLY
  - 2 - BACKSHELL & MX150 HOUSING KEY B ASSEMBLY
  - 3 - BACKSHELL & MX150 HOUSING KEY C ASSEMBLY
  - 4 - BACKSHELL & MX150 HOUSING KEY D ASSEMBLY
- BACKSHELL FEATURES
  - 1 - WITH RIBS
  - 2 - WITHOUT RIBS
- MX150 CIRCUIT SIZE 02, 03, 04, 05, 06

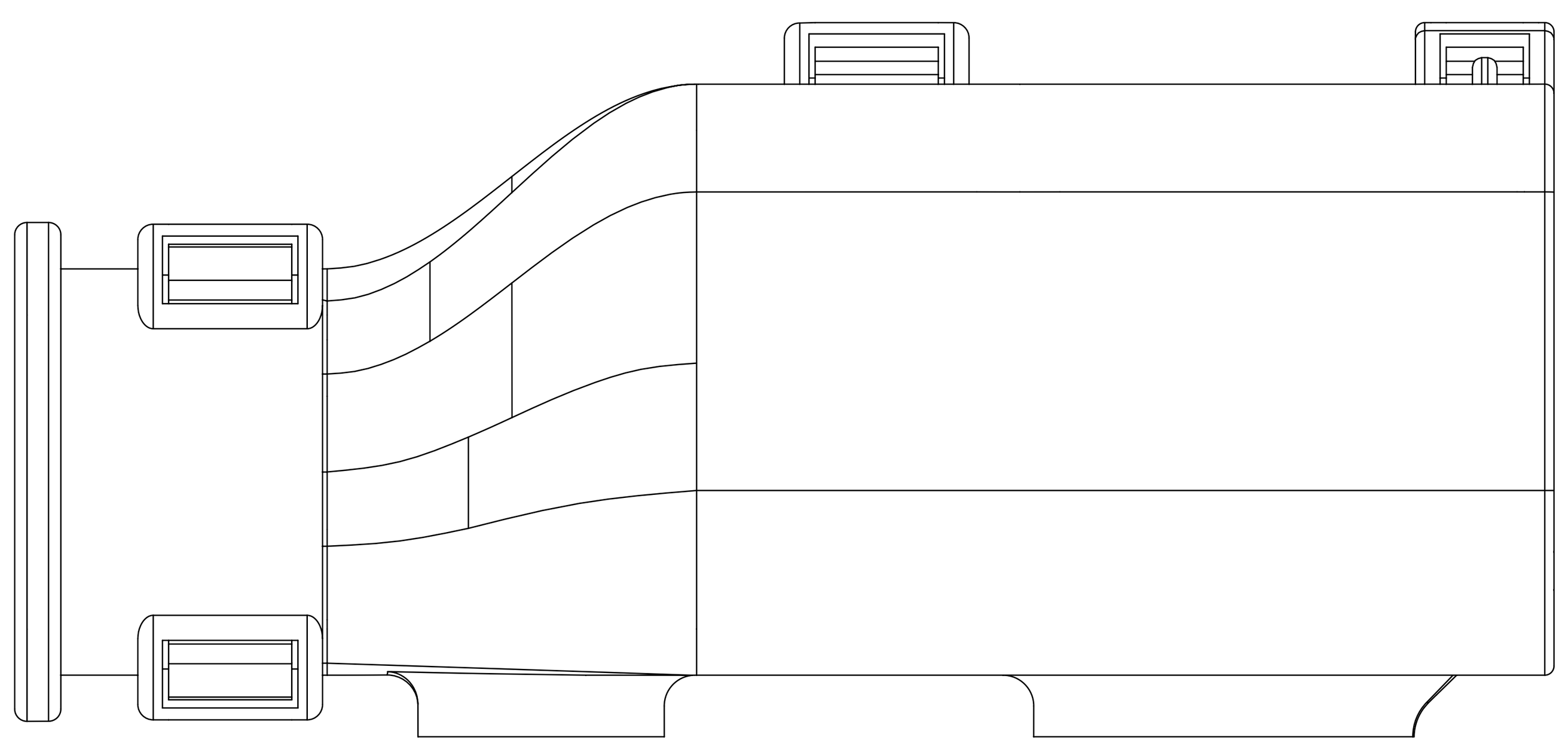


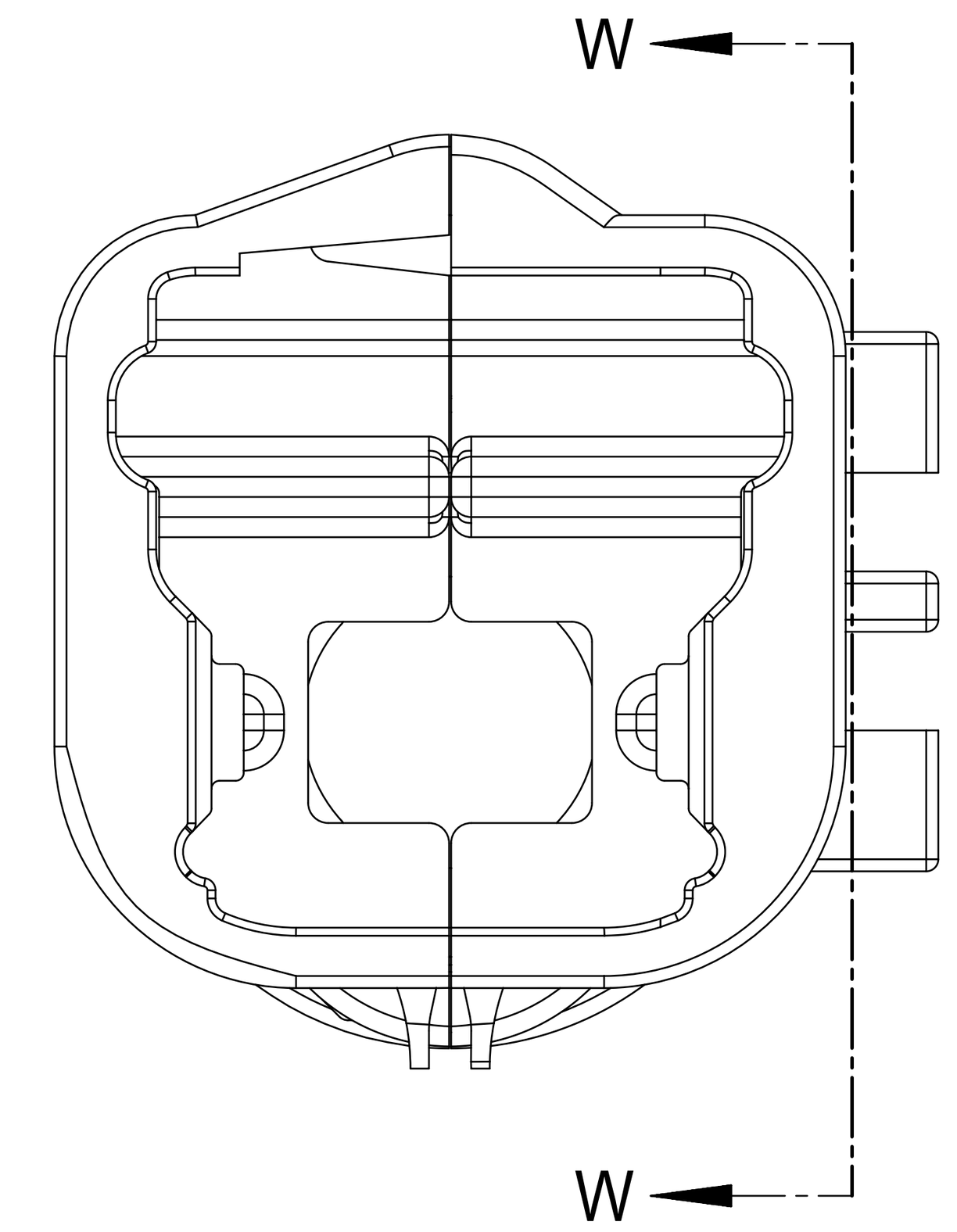
FUNCTIONAL SYMBOLS: FA = 0; FC = 0; FP = 0	THIS DRAWING CONTAINS INFORMATION THAT IS PROPRIETARY TO MOLEX ELECTRONIC TECHNOLOGIES, LLC AND SHOULD NOT BE USED WITHOUT WRITTEN PERMISSION						
DIVISIONAL SYMBOLS	DIMENSION UNITS: mm	SCALE: 4:1	CURRENT REV DESC:		molex		
	GENERAL TOLERANCES (UNLESS SPECIFIED)		EC NO: 643941		MX150 RCPT SINGLE ROW SEALED ASSY MAT SEAL		
	ANGULAR TOL ± 1.0 °		DRWN: XLDONG03	2020/08/21			
	4 PLACES ±		CHK'D: JDENG02	2020/08/26	PRODUCT CUSTOMER DRAWING		
	3 PLACES ±		APPR: JDENG02	2020/08/26			
	2 PLACES ± 0.1		INITIAL REVISION:		DOCUMENT NUMBER: SD-33471-0001	DOC TYPE: PSD	DOC PART: 001
	1 PLACE ± 0.2		DRWN: APROFFITT	2015/11/04			REVISION: A1
	0 PLACES ±		APPR: KDEKOSKI	2016/06/14			
	DRAFT WHERE APPLICABLE MUST REMAIN WITHIN DIMENSIONS		THIRD ANGLE PROJECTION	DRAWING: D-SIZE	SERIES: 33471	MATERIAL NUMBER: SEE NOTE 2a	CUSTOMER: GENERAL MARKET
							SHEET NUMBER: 6 OF 8

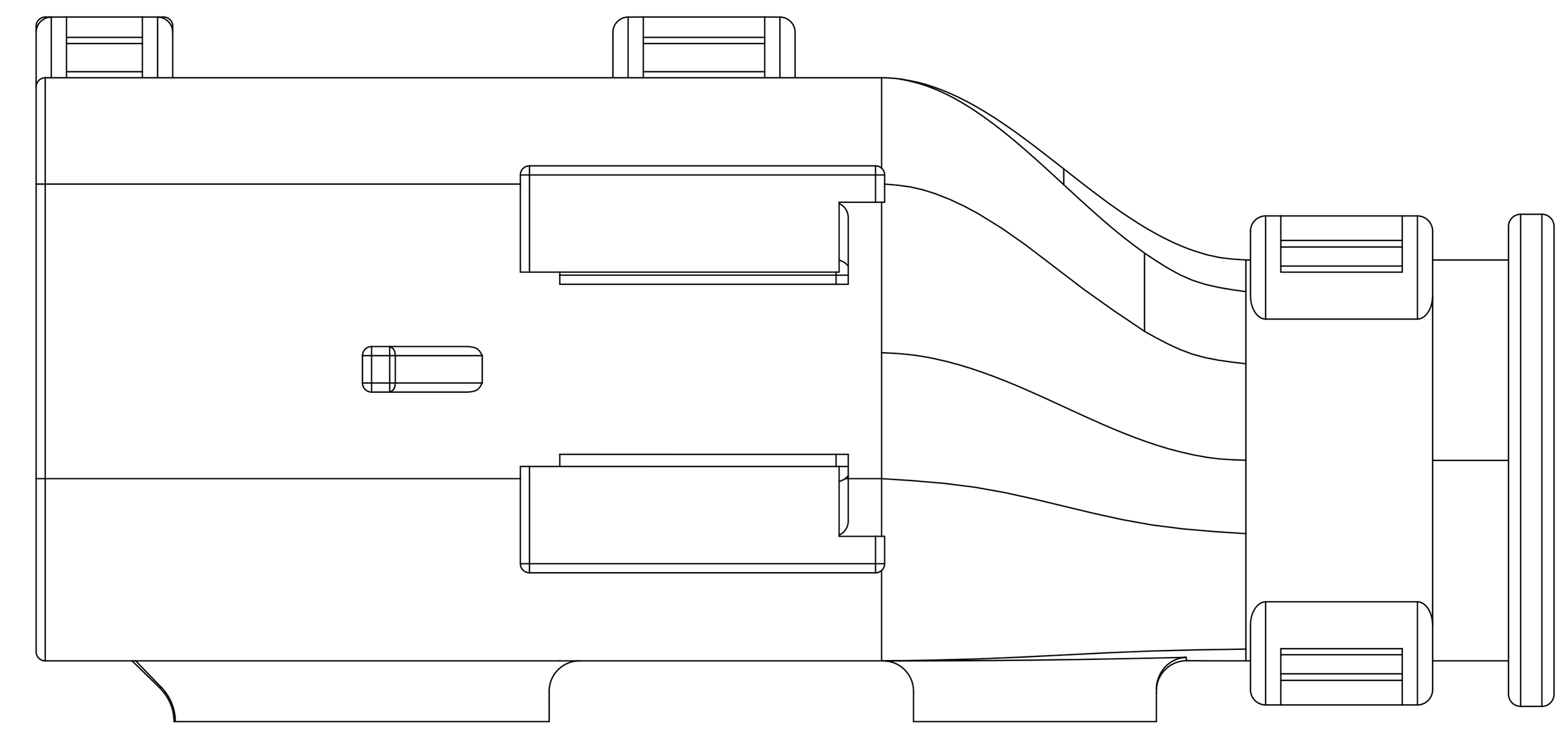
DOCUMENT STATUS	P1	RELEASE DATE	2020/08/26 07:23:52

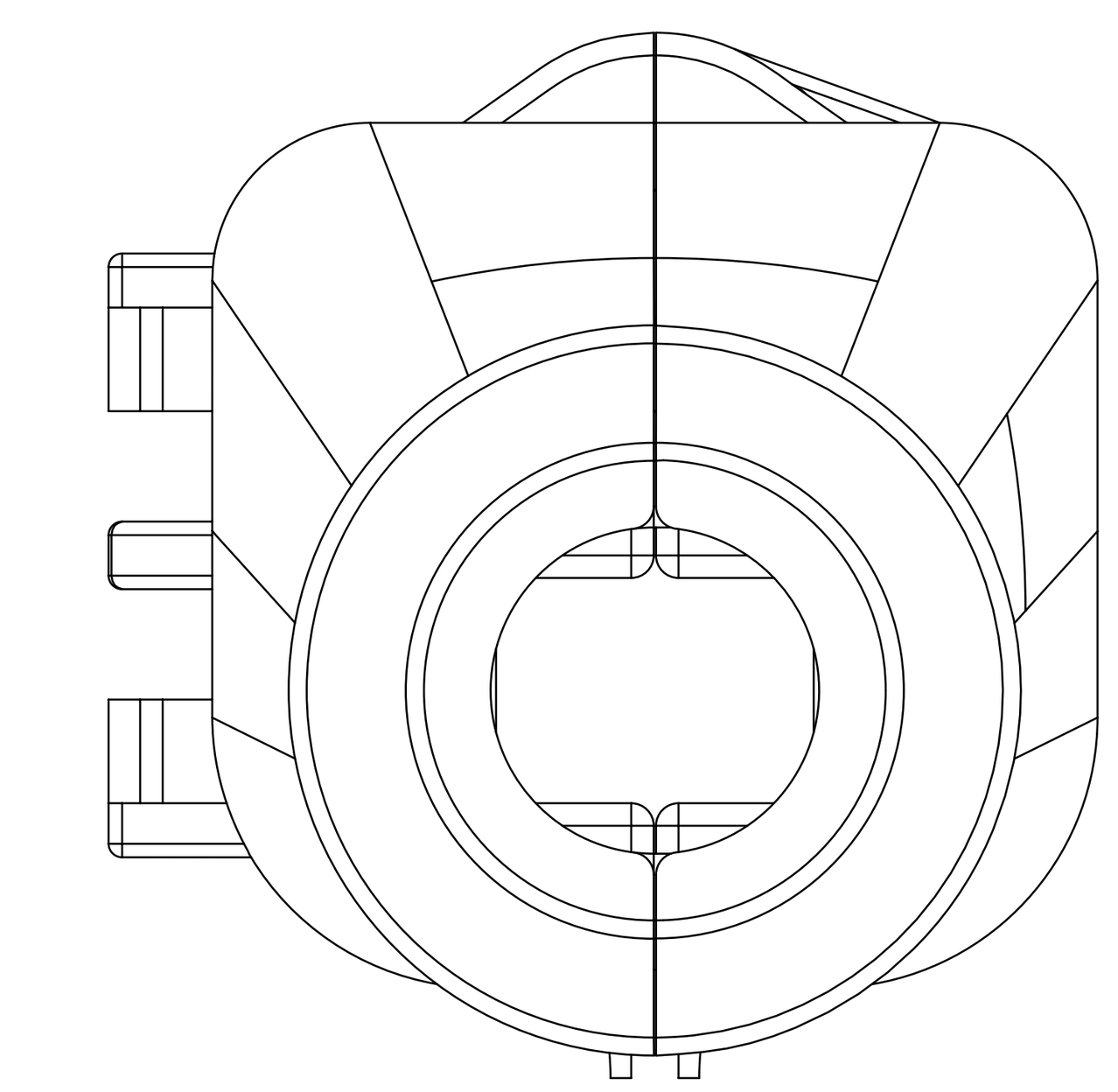
SHEET DESCRIPTION

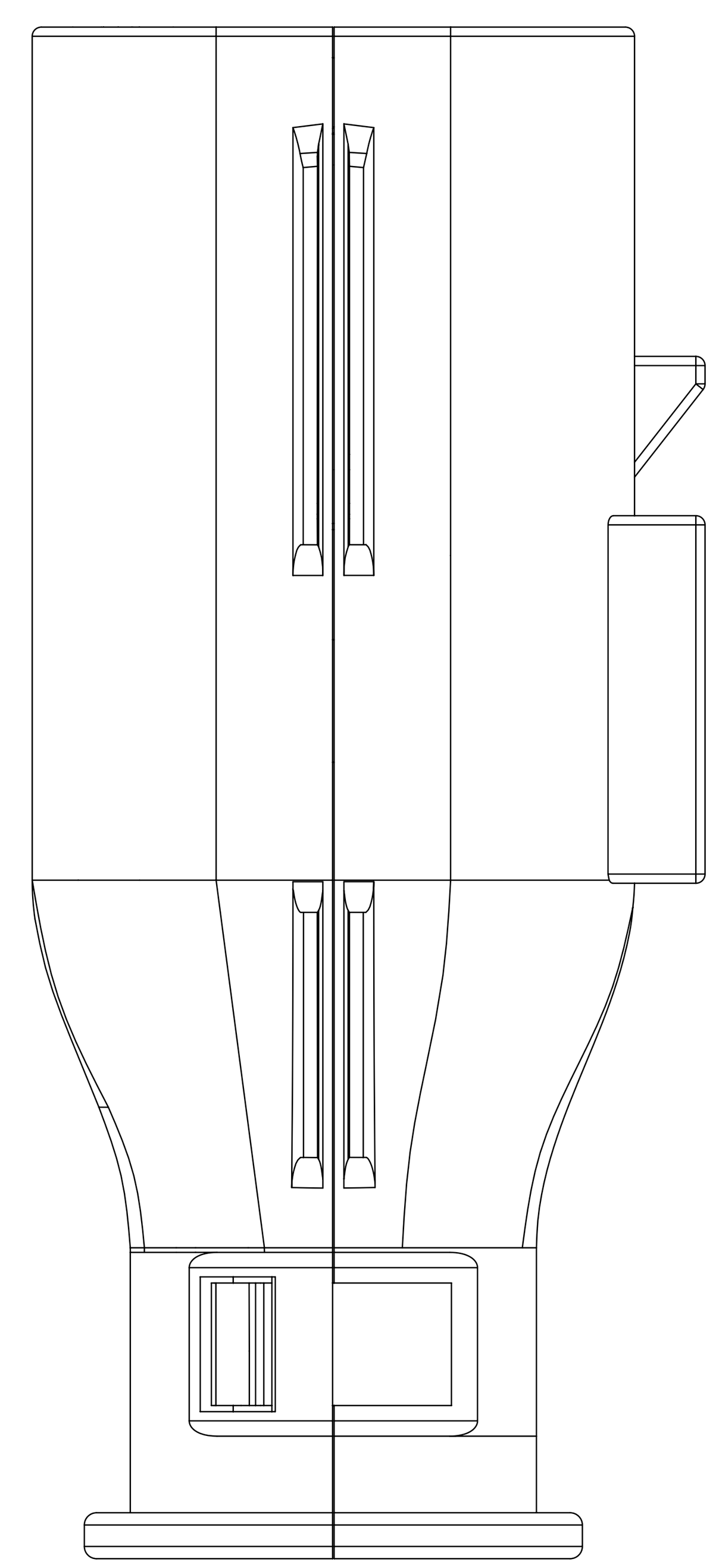
BACKSHELL

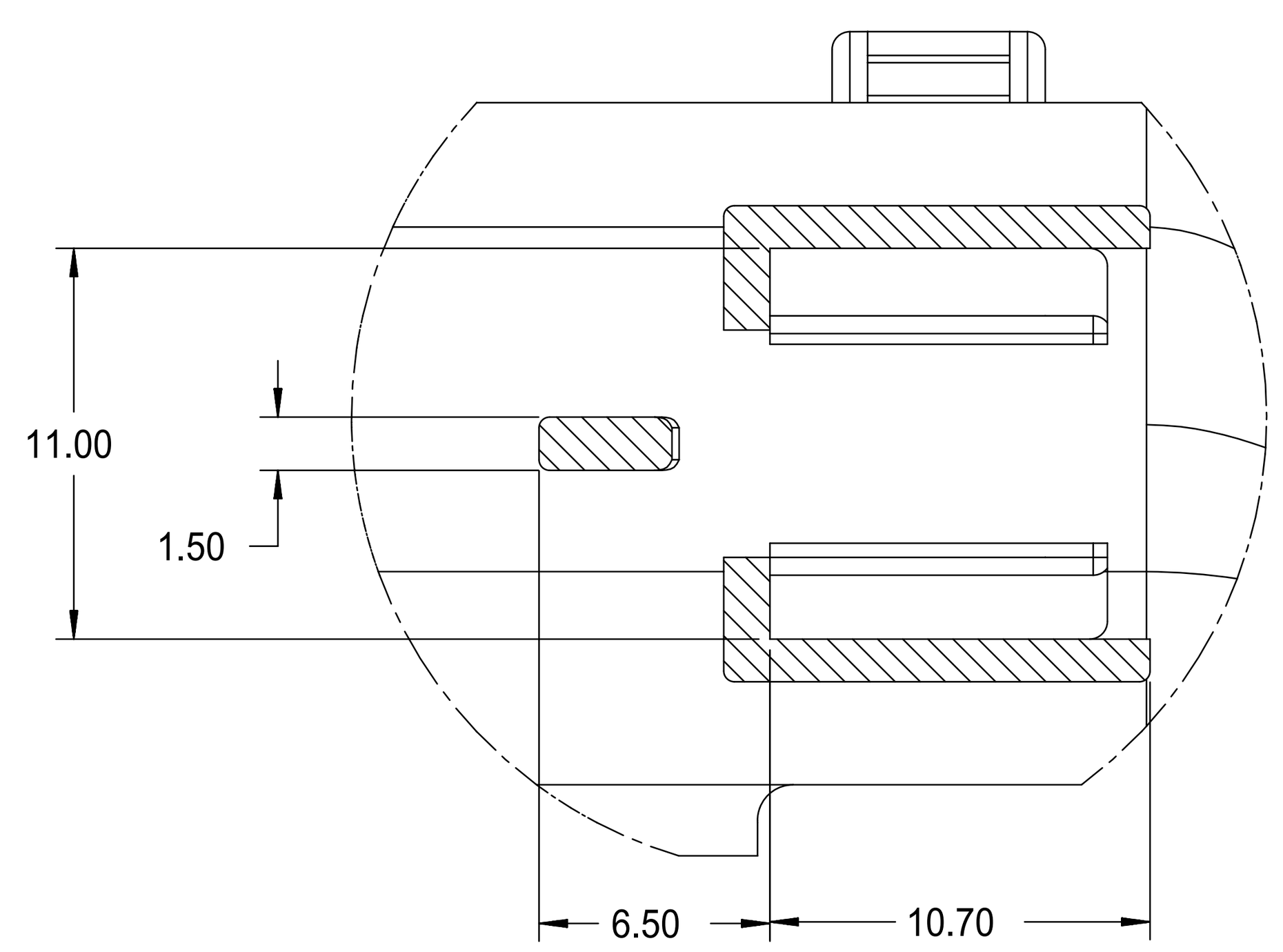












Partial W-W
SCALE 4:1

THIS DRAWING CONTAINS INFORMATION THAT IS PROPRIETARY TO MOLEX ELECTRONIC TECHNOLOGIES, LLC AND SHOULD NOT BE USED WITHOUT WRITTEN PERMISSION

FUNCTIONAL SYMBOLS	F/A = 0; F/C = 0; F/P = 0
DIVISIONAL SYMBOLS	
DIMENSION UNITS	mm
SCALE	4:1
GENERAL TOLERANCES (UNLESS SPECIFIED)	
ANGULAR TOL	± 1.0 °
4 PLACES	±
3 PLACES	±
2 PLACES	± 0.1
1 PLACE	± 0.2
0 PLACES	±
DRAFT WHERE APPLICABLE MUST REMAIN WITHIN DIMENSIONS	
CURRENT REV DESC:	
EC NO:	643941
DRWN:	XLDONG03 2020/08/21
CHK'D:	JDENG02 2020/08/26
APPR:	JDENG02 2020/08/26
INITIAL REVISION:	
DRWN:	APROFFITT 2015/11/04
APPR:	KDEKOSKI 2016/06/14
THIRD ANGLE PROJECTION	
DRAWING	D-SIZE
SERIES	33471

molex

MX150 RCPT
SINGLE ROW SEALED ASSY MAT SEAL

PRODUCT CUSTOMER DRAWING

DOCUMENT NUMBER	DOC TYPE	DOC PART	REVISION
SD-33471-0001	PSD	001	A1

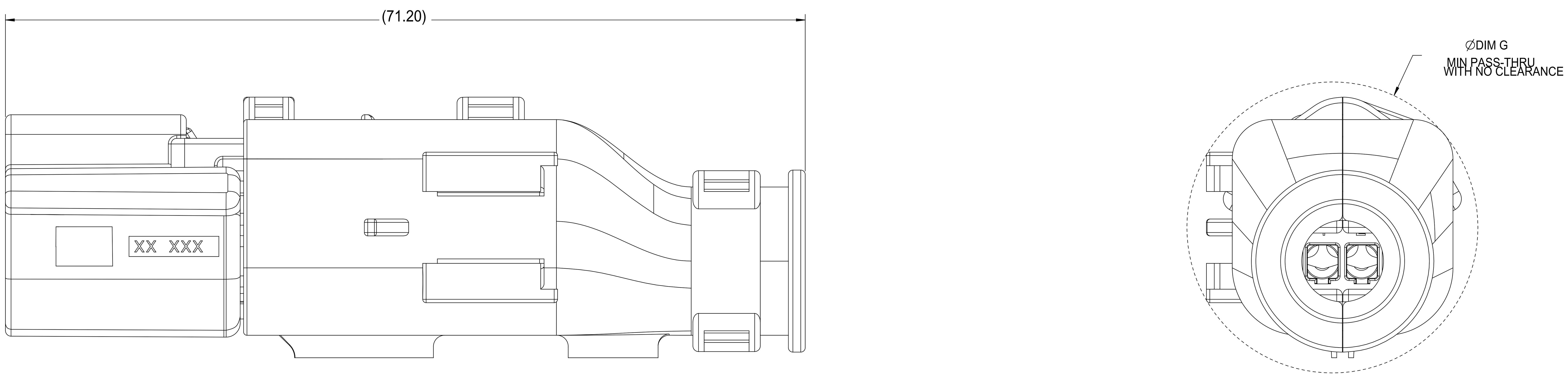
MATERIAL NUMBER	CUSTOMER	SHEET NUMBER
SEE NOTE 2a	GENERAL MARKET	7 OF 8

DOCUMENT STATUS	P1	RELEASE DATE	2020/08/26 07:23:52

SHEET DESCRIPTION

BACKSHELL CONFIGURATIONS

CHARTED DIMENSIONS	
DESCRIPTION	DIMENSIONS G
1X2	26.00



RECEPTACLE SEALED ASSEMBLY WITH RECEPTACLE BACKSHELL

FUNCTIONAL SYMBOLS = 0 = 0 = 0

DIVISIONAL SYMBOLS

THIS DRAWING CONTAINS INFORMATION THAT IS PROPRIETARY TO MOLEX ELECTRONIC TECHNOLOGIES, LLC AND SHOULD NOT BE USED WITHOUT WRITTEN PERMISSION

DIMENSION UNITS	SCALE
mm	4:1
GENERAL TOLERANCES (UNLESS SPECIFIED)	
ANGULAR TOL	± 1.0°
4 PLACES	±
3 PLACES	±
2 PLACES	± 0.1
1 PLACE	± 0.2
0 PLACES	±

DRAFT WHERE APPLICABLE MUST REMAIN WITHIN DIMENSIONS

CURRENT REV DESC:

EC NO: 643941
DRWN: XLDONG03 2020/08/21
CHK'D: JDENG02 2020/08/26
APPR: JDENG02 2020/08/26

INITIAL REVISION:
DRWN: APROFFITT 2015/11/04
APPR: KDEKOSKI 2016/06/14

THIRD ANGLE PROJECTION | DRAWING D-SIZE | SERIES 33471

molex

MX150 RCPT
SINGLE ROW SEALED ASSY MAT SEAL

PRODUCT CUSTOMER DRAWING

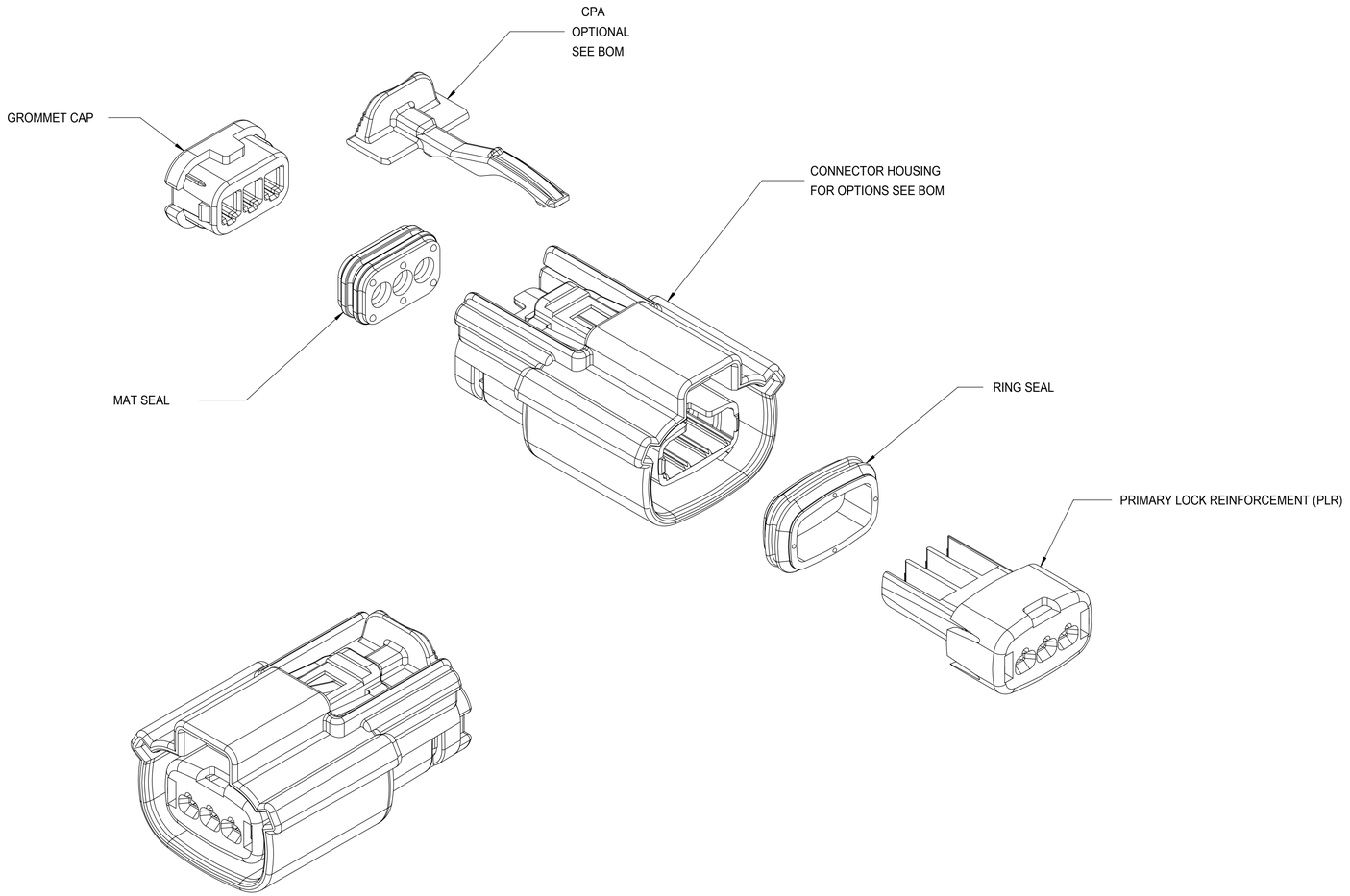
DOCUMENT NUMBER	DOC TYPE	DOC PART	REVISION
SD-33471-0001	PSD	001	A1

MATERIAL NUMBER	CUSTOMER	SHEET NUMBER
SEE NOTE 2a	GENERAL MARKET	8 OF 8

DOCUMENT STATUS	P1	RELEASE DATE	2020/08/26 07:23:52

TABLE OF CONTENTS

SHEET NO.	SHEET DESCRIPTION
1	NOTES
2	KEY CONFIGURATIONS
3	RECEPTACLE SEALED ASSEMBLY
4	BACKSHELL NOTES
5	BACKSHELL
6	BACKSHELL CONFIGURATION
7	BOM



NOTES: VALID UNLESS OTHERWISE SPECIFIED

1. GENERAL:
a. APPLICATION SPECIFICATION SEE: AS-33472-100
-CONTAINS: PRODUCT INTRODUCTION, PRODUCT SUMMARY, CONNECTOR ASSEMBLY, PACKAGING INFORMATION, CONNECTOR MATING, SERVICE INSTRUCTIONS, ELECTRICAL CONTINUITY CHECKING, CRIMPING, AND TROUBLESHOOTING.
-DESIGNED TO MATE WITH DEVICE CONNECTION AS SPECIFIED IN DRAWING EWCAP 150-S-003-1-Z05, AVAILIBLE AT <http://ewcap.uscarteams.org/>.
-DESIGNED TO MATE WITH BLADE SEALED ASSEMBLY AS SPECIFIED IN DRAWING SD-33481-031
-FOR 1.5mm RECEPTACLE TERMINALS TO BE USED WITH THIS ASSEMBLY. SEE MOLEX DRAWING SD-33012-002.
-SYSTEM TO BE USED WITH WIRE WITHIN DIAMETER RANGE OF 1.2 mm TO 2.69 mm.
-ASSEMBLY SHIPPED WITH PLR AND CPA IN PRE-LOCK POSITION (SEE SECTION Z-Z PRE-LOCK).
-IN THE EVENT THAT THE PLR IS FOUND IN THE SEATED (FINAL LOCK) POSITION, REFER TO MOLEX SPECIFICATION PS-34646-001, AVAILABLE AT www.molex.com <http://www.molex.com>.
-ASSEMBLY CONFORMS TO SAE/USCAR-2 REV.4 WITH THE FOLLOWING EXCEPTIONS:
ENGAGEMENT FORCE TO MOVE CPA FROM PRE-LOCK TO FINAL LOCK POSITION WHEN UNMATED: 40N MIN.
DISENGAGEMENT FORCE TO MOVE CPA FROM FINAL LOCK TO PRE-LOCK POSITION: 3N MIN, 40N MAX
TERMINAL INSERTION FORCE FOR WIRE DIAMETER ABOVE 2.5mm NOT EXCEEDING 2.69mm SHALL NOT EXCEED 40 NEWTONS.
b. PRODUCT SPECIFICATION SEE: PS-33471-000
CONTAINS: PRODUCT INTRODUCTION, PRODUCT SUMMARY, RATINGS (CURRENT, TEMPERATURE, SEALING, AND FLAMMABILITY), AND PRODUCT VALIDATION.
c. PACKAGING SPECIFICATION PER MOLEX DRAWING: PK-31300-635
d. PARTS MUST BE IN COMPLIANCE TO MOLEX CHEMICAL SUBSTANCES FOR PRODUCTS AND PACKAGING SPECIFICATION: ES-40000-5016
e. DATA MUST BE SUBMITTED UNDER THE MOLEX PART NUMBER TO IMDS (COMPANY ID#13255)

2. DESIGN - MATERIALS:
a. CONNECTOR HOUSING, GROMMET CAP, PLR: SPS/NYLON BLEND 20% GLASS FILLED
CPA: PBT 20% GLASS FILLED
MAT SEAL, RING SEAL: INHERENTLY LUBRICATED SILICONE

3. DESIGN - GEOMETRY:
a. THIS IS A 100% CAD GENERATED PART. THE CAD MATHEMATICAL DATA IS THE MASTER FOR THIS PART. FOR DIMENSIONAL OR ANY INFORMATION NOT SHOWN ON THIS DRAWING, ANALYZE THE CAD MODEL.
b. GEOMETRIC DIMENSIONS AND TOLERANCES PER ASME Y14.5M - 1994
c. EDGES AND UNDIMENSIONED DETAILS PER ISO13715
d. CORNERS SHOWN AS SHARP TO BE R 0.2 MAX.
e. LETTERING SHALL BE 0.15 MAX RAISED IN 0.25 MAX RECESS PAD. THIS INCLUDES RECYCLING CODE, CAVITY ID, VENDOR IDENTIFICATION, AND CUSTOMER MATERIAL NUMBER.
f. VISUAL DEFECTS SHALL MEET COSMETIC STANDARD PS-45499-002 (Class B)
g. LASER MARKING: TBD

MODELS USED
EM-33471-301
EM-33471-302
EM-33471-303
EM-33471-304

INSPECTION NUMBER LOG
LAST NUMBER USED: 5
ADDED:
REMOVED:

REV	DESCRIPTION
R	UPDATED THE DRAWING FRAME
Q7	ADD NEW P/NS 33471-33XX
Q6	UPDATED VIEWS
Q5	ADD BACKSHELL CONFIGURATION
Q4	ADD NEW P/N 33471-0347
Q3	334710345 IS SAME AS 334710340 SO VOID 334710345
Q2	CHANGE THE STATUS TO SALEABLE
Q1	UPDATED NOTES
Q	REDRAWN

THIS DRAWING CONTAINS INFORMATION THAT IS PROPRIETARY TO MOLEX ELECTRONIC TECHNOLOGIES, LLC AND SHOULD NOT BE USED WITHOUT WRITTEN PERMISSION

FUNCTIONAL SYMBOLS
FA = 0
FC = 0
FP = 0
DIVISIONAL SYMBOLS

DIMENSION UNITS	SCALE
mm	3:1

GENERAL TOLERANCES (UNLESS SPECIFIED)

ANGULAR TOL	± 3.0 °
4 PLACES	±
3 PLACES	±
2 PLACES	± 0.1
1 PLACE	± 0.3
0 PLACES	±

DRAFT WHERE APPLICABLE MUST REMAIN WITHIN DIMENSIONS

CURRENT REV DESC:

EC NO: 643941
DRWN: XLDONG03 2020/08/21
CHK'D: JDENG02 2020/08/26
APPR: JDENG02 2020/08/26

INITIAL REVISION:
DRWN: DMARCOUX 2002/06/18
APPR: FHOLUB 2002/06/18

molex

MX150 1X3 RECEPTACLE SEALED ASSEMBLY MAT SEAL

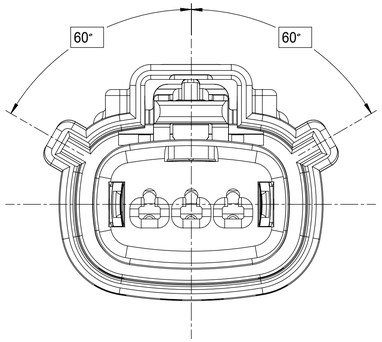
PRODUCT CUSTOMER DRAWING

DOCUMENT NUMBER	DOC TYPE	DOC PART	REVISION
SD-33471-031	PSD	001	R

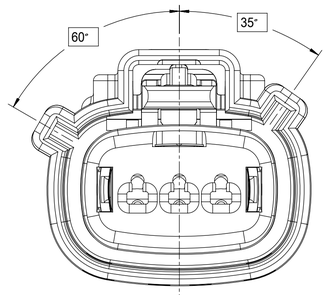
THIRD ANGLE PROJECTION	DRAWING	SERIES	MATERIAL NUMBER	CUSTOMER	SHEET NUMBER
	D-SIZE	33471	SEE BOM	GENERAL MARKET	1 OF 7

DOCUMENT STATUS	P1	RELEASE DATE	2020/08/26 07:23:55

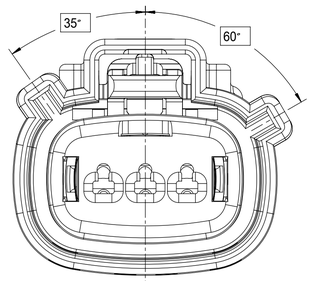
KEY CONFIGURATIONS



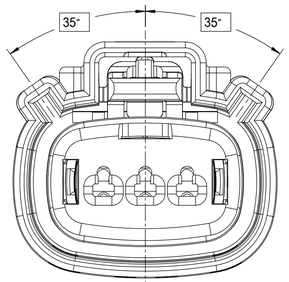
KEY A



KEY B



KEY C

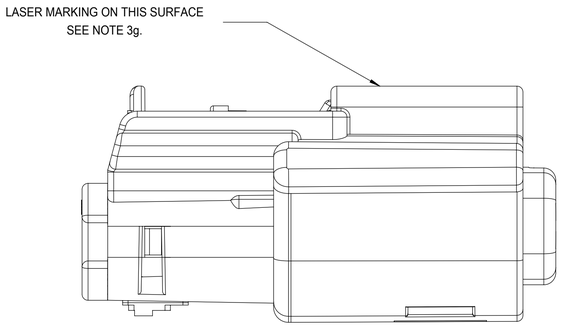


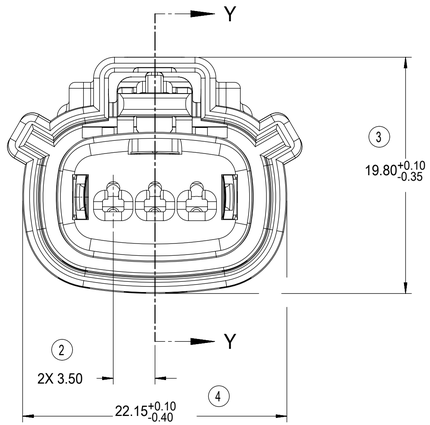
KEY D

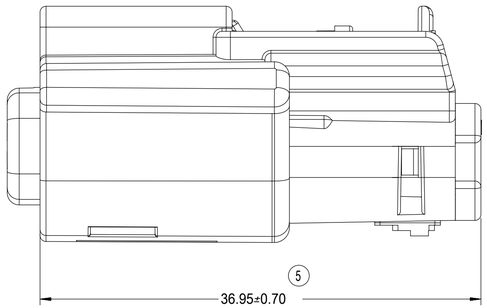
DOCUMENT STATUS	P1	RELEASE DATE	2020/08/26 07:23:55

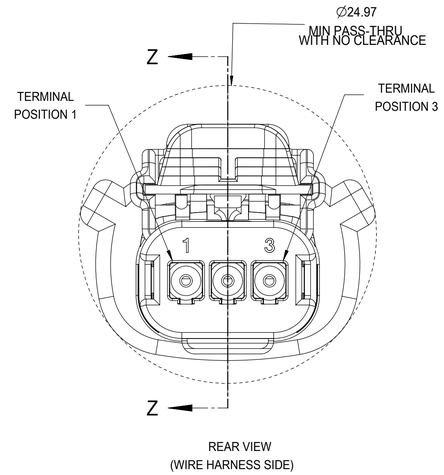
FUNCTIONAL SYMBOLS	THIS DRAWING CONTAINS INFORMATION THAT IS PROPRIETARY TO MOLEX ELECTRONIC TECHNOLOGIES, LLC AND SHOULD NOT BE USED WITHOUT WRITTEN PERMISSION						
FA = 0	DIMENSION UNITS: mm	SCALE: 4:1	CURRENT REV DESC:		molex		
FC = 0	GENERAL TOLERANCES (UNLESS SPECIFIED)				MX150 1X3 RECEPTACLE SEALED ASSEMBLY MAT SEAL		
FE = 0	ANGULAR TOL ± 3.0 °		EC NO: 643941				
DIVISIONAL SYMBOLS	4 PLACES ±		DRWN: XLDONG03	2020/08/21	PRODUCT CUSTOMER DRAWING		
	3 PLACES ±		CHK'D: JDENG02	2020/08/26			
	2 PLACES ± 0.1		APPR: JDENG02	2020/08/26			
	1 PLACE ± 0.3		INITIAL REVISION:		DOCUMENT NUMBER: SD-33471-031	DOC TYPE: PSD	DOC PART: 001	REVISION: R
	0 PLACES ±		DRWN: DMARCOUX	2002/06/18			
	DRAFT WHERE APPLICABLE MUST REMAIN WITHIN DIMENSIONS		APPR: FHOLUB	2002/06/18			
	THIRD ANGLE PROJECTION	DRAWING: D-SIZE	SERIES: 33471		MATERIAL NUMBER: SEE BOM	CUSTOMER: GENERAL MARKET	SHEET NUMBER: 2 OF 7	

RECEPTACLE SEALED ASSEMBLY

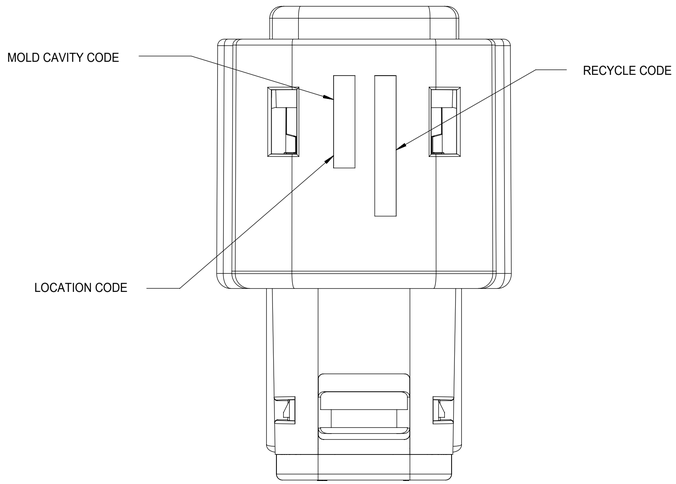


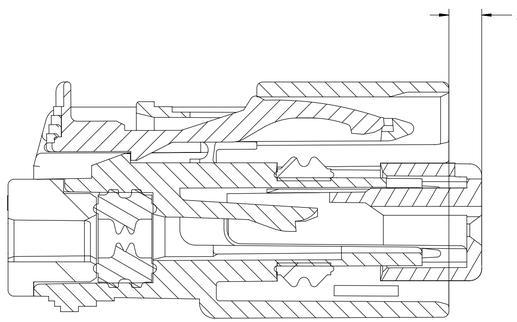






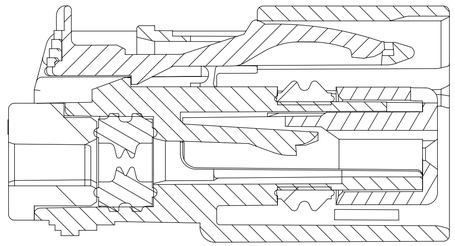
REAR VIEW
(WIRE HARNESS SIDE)





PRIMARY LOCK REINFORCEMENT (PLR) SHOWN
IN PRE-STAGED POSITION

SECTION Z-Z



PRIMARY LOCK REINFORCEMENT (PLR) SHOWN
IN FINAL LOCK POSITION

SECTION Y-Y

DOCUMENT STATUS	P1	RELEASE DATE	2020/08/26 07:23:55

THIS DRAWING CONTAINS INFORMATION THAT IS PROPRIETARY TO MOLEX ELECTRONIC TECHNOLOGIES, LLC AND SHOULD NOT BE USED WITHOUT WRITTEN PERMISSION

FUNCTIONAL SYMBOLS
FA = 0
FC = 0
FP = 0

DIVISIONAL SYMBOLS

DIMENSION UNITS	SCALE
mm	4:1

GENERAL TOLERANCES (UNLESS SPECIFIED)

ANGULAR TOL	±	3.0 °
4 PLACES	±	
3 PLACES	±	
2 PLACES	±	0.1
1 PLACE	±	0.3
0 PLACES	±	

DRAFT WHERE APPLICABLE MUST REMAIN WITHIN DIMENSIONS

CURRENT REV DESC:

EC NO: 643941
DRWN: XLDONG03 2020/08/21
CHK'D: JDENG02 2020/08/26
APPR: JDENG02 2020/08/26

INITIAL REVISION:
DRWN: DMARCOUX 2002/06/18
APPR: FHOLUB 2002/06/18

THIRD ANGLE PROJECTION

DRAWING	SERIES
D-SIZE	33471

molex

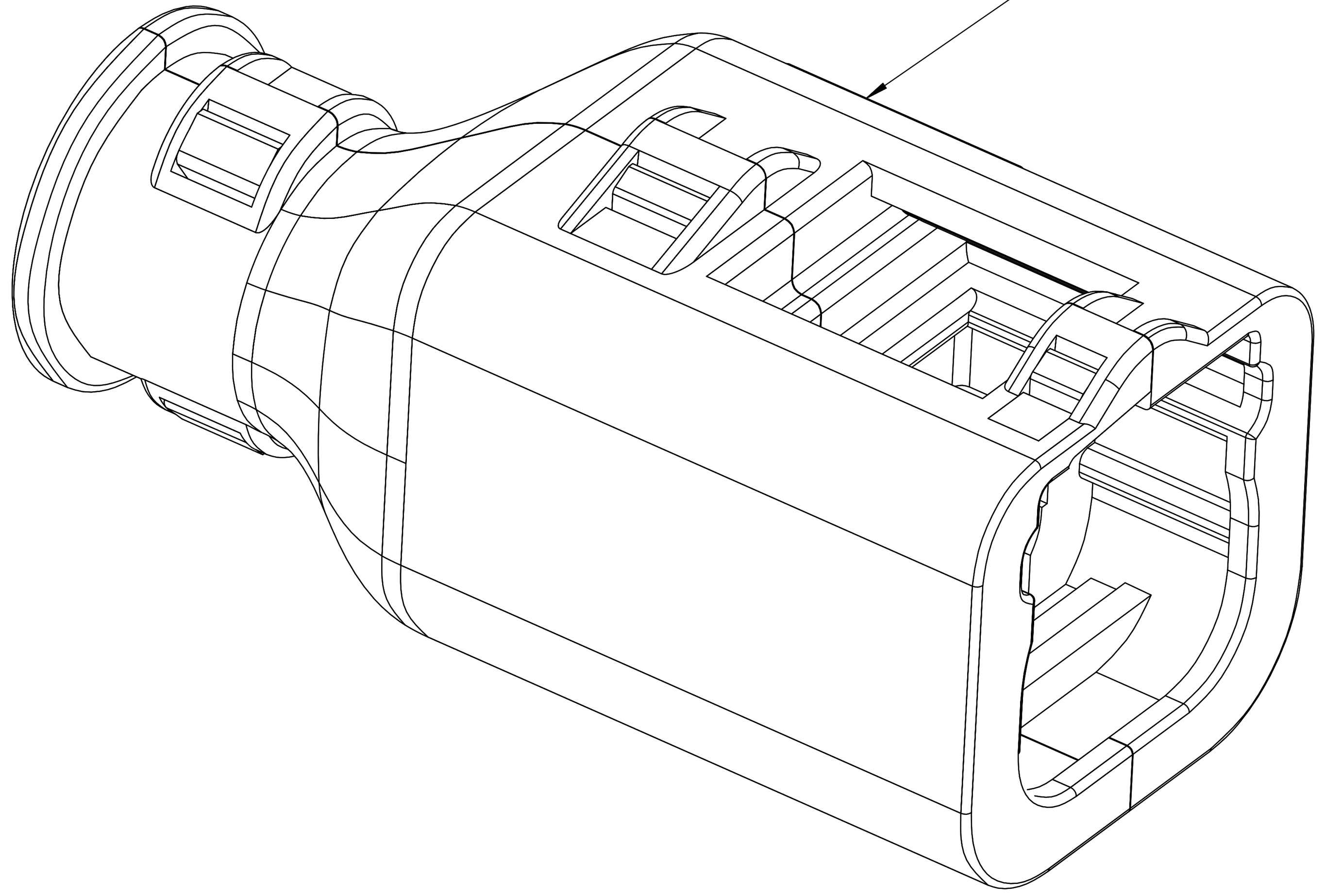
MX150 1X3 RECEPTACLE
SEALED ASSEMBLY MAT SEAL

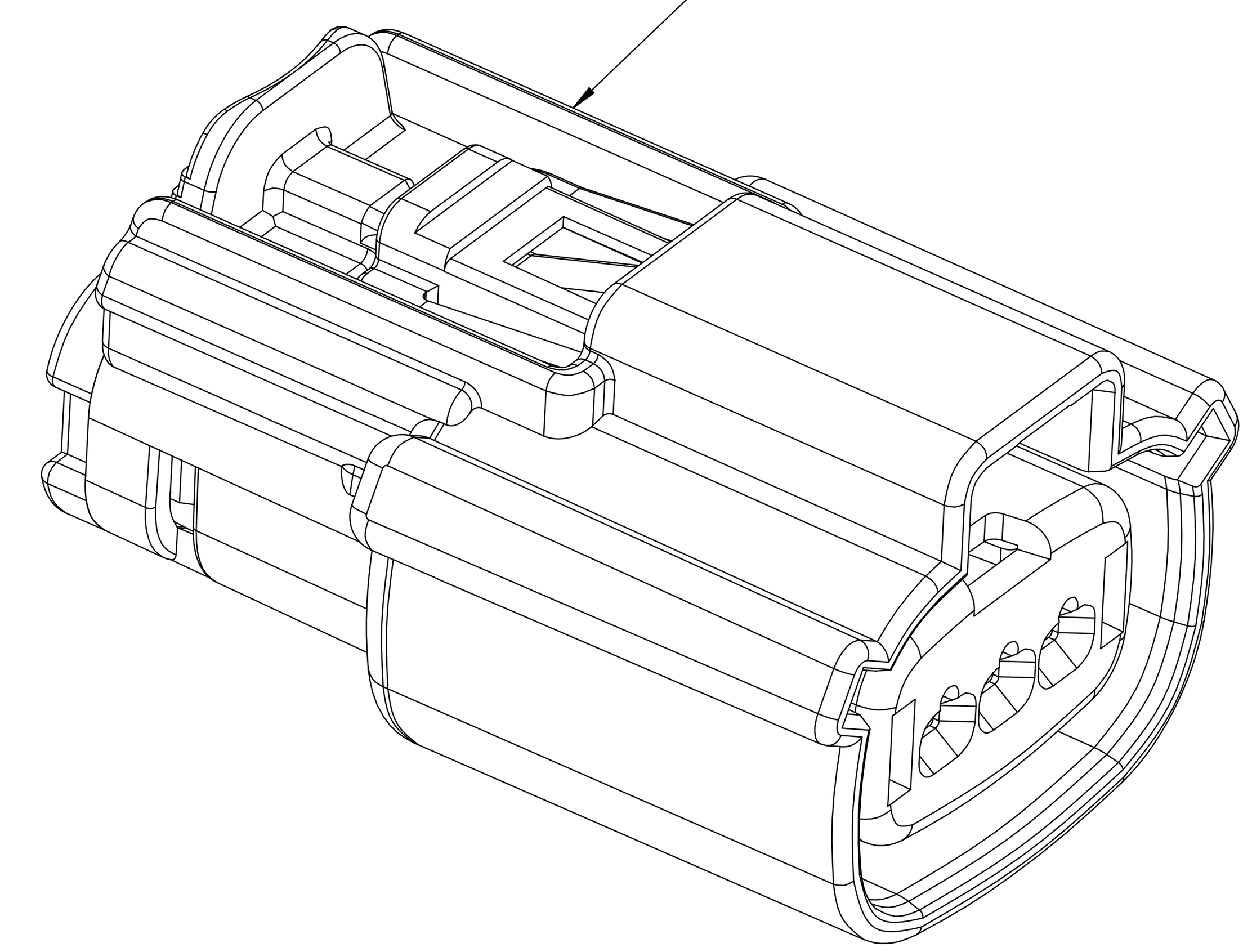
PRODUCT CUSTOMER DRAWING

DOCUMENT NUMBER	DOC TYPE	DOC PART	REVISION
SD-33471-031	PSD	001	R

MATERIAL NUMBER	CUSTOMER	SHEET NUMBER
SEE BOM	GENERAL MARKET	3 OF 7

BACKSHELL NOTES



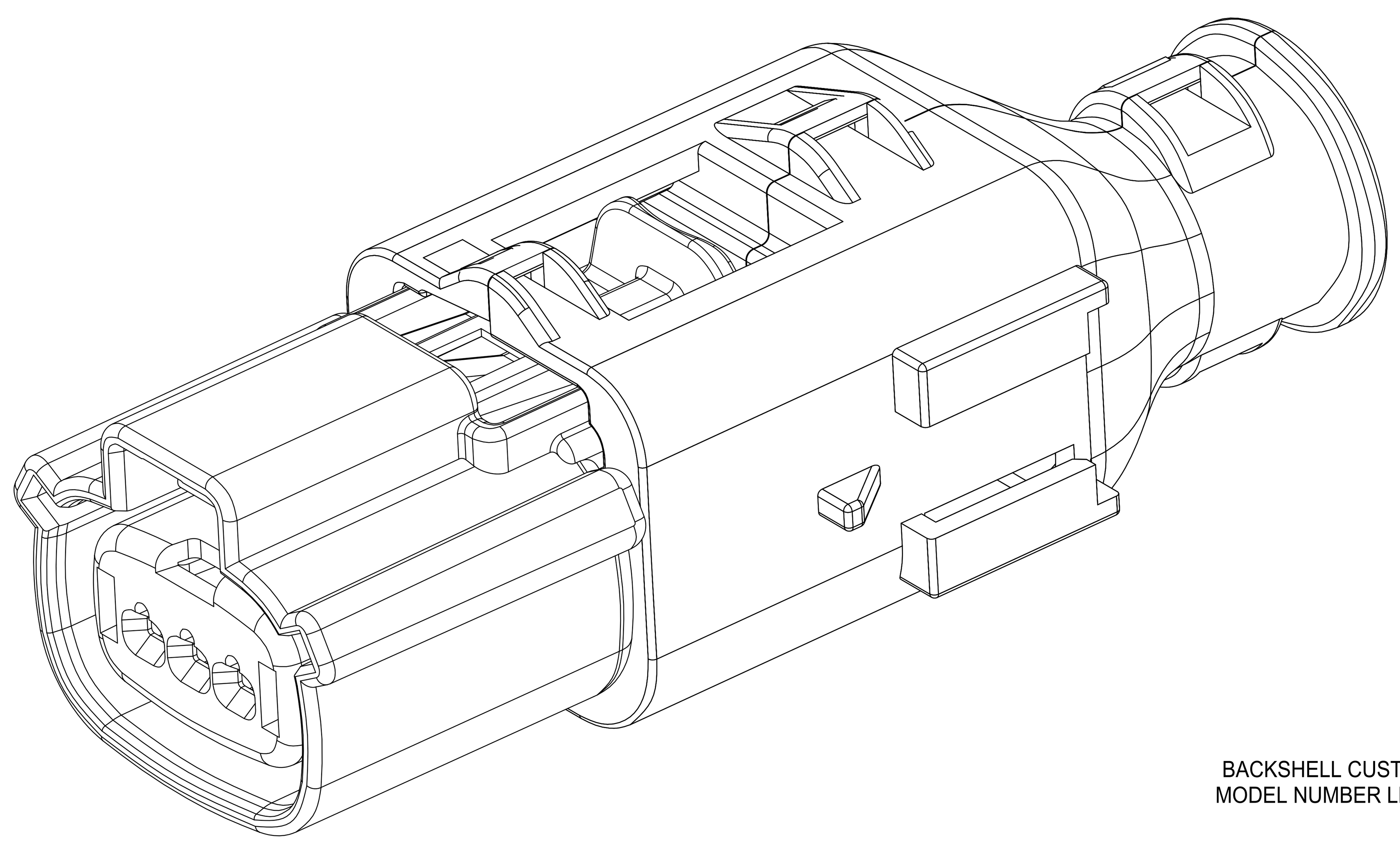


BACKSHELL NOTES: VALID UNLESS OTHERWISE SPECIFIED

1. GENERAL:

a. APPLICATION SPECIFICATION SEE: AS-34951-001

- -DESIGNED TO MATE WITH RECEPTACLE SEALED ASSEMBLY SPECIFIED IN MOLEX DRAWING SD-33471-031.
- -SYSTEM TO BE USED WITH WIRE WITHIN DIAMETER RANGE OF 1.2mm TO 2.69mm.
- -COMPONENTS ARE OPTIONAL AND MUST BE PURCHASED SEPERATELY.
- -BACKSHELL DESIGN IS OWNED BY SCHLEMMER.
- -FOR ADDITIONAL INFORMATION SEE THE BACKSHELL COMPONENT DRAWING SD-34949-0001.



BACKSHELL CUSTOMER MODEL NUMBER LEGEND

34949-XXXX

CUSTOMER MODEL COMPONENTS
- 0 - BACKSHELL ONLY
- 1 - BACKSHELL & MX150 HOUSING KEY A ASSEMBLY
- 2 - BACKSHELL & MX150 HOUSING KEY B ASSEMBLY
- 3 - BACKSHELL & MX150 HOUSING KEY C ASSEMBLY
- 4 - BACKSHELL & MX150 HOUSING KEY D ASSEMBLY

BACKSHELL FEATURES
- 1 - WITH RIBS
- 2 - WITHOUT RIBS

MX150 CIRCUIT SIZE 02, 03, 04, 05, 06

THIS DRAWING CONTAINS INFORMATION THAT IS PROPRIETARY TO MOLEX ELECTRONIC TECHNOLOGIES, LLC AND SHOULD NOT BE USED WITHOUT WRITTEN PERMISSION

FUNCTIONAL SYMBOLS	DIMENSION UNITS: mm	SCALE: 4:1
FA = 0	GENERAL TOLERANCES (UNLESS SPECIFIED)	
FC = 0	ANGULAR TOL	± 3.0 °
FP = 0	4 PLACES	±
DIVISIONAL SYMBOLS	3 PLACES	±
	2 PLACES	± 0.1
	1 PLACE	± 0.3
	0 PLACES	±
	DRAFT WHERE APPLICABLE MUST REMAIN WITHIN DIMENSIONS	

CURRENT REV DESC:

EC NO:	643941	
DRWN:	XLDONG03	2020/08/21
CHK'D:	JDENG02	2020/08/26
APPR:	JDENG02	2020/08/26
INITIAL REVISION:		
DRWN:	DMARCOUX	2002/06/18
APPR:	FHOLUB	2002/06/18

THIRD ANGLE PROJECTION	DRAWING	SERIES
	D-SIZE	33471

molex

MX150 1X3 RECEPTACLE SEALED ASSEMBLY MAT SEAL


PRODUCT CUSTOMER DRAWING

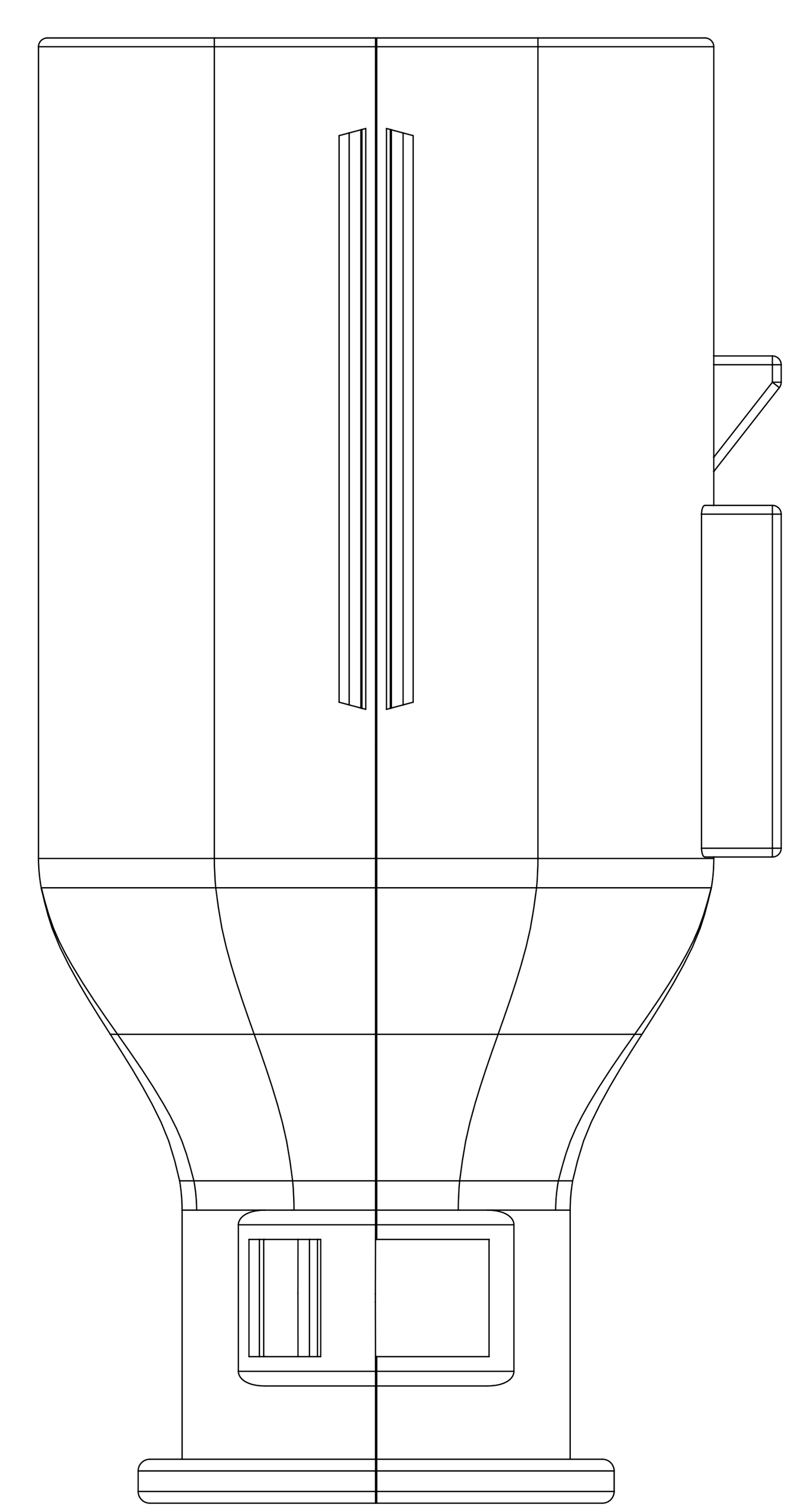
DOCUMENT NUMBER	DOC TYPE	DOC PART	REVISION
SD-33471-031	PSD	001	R

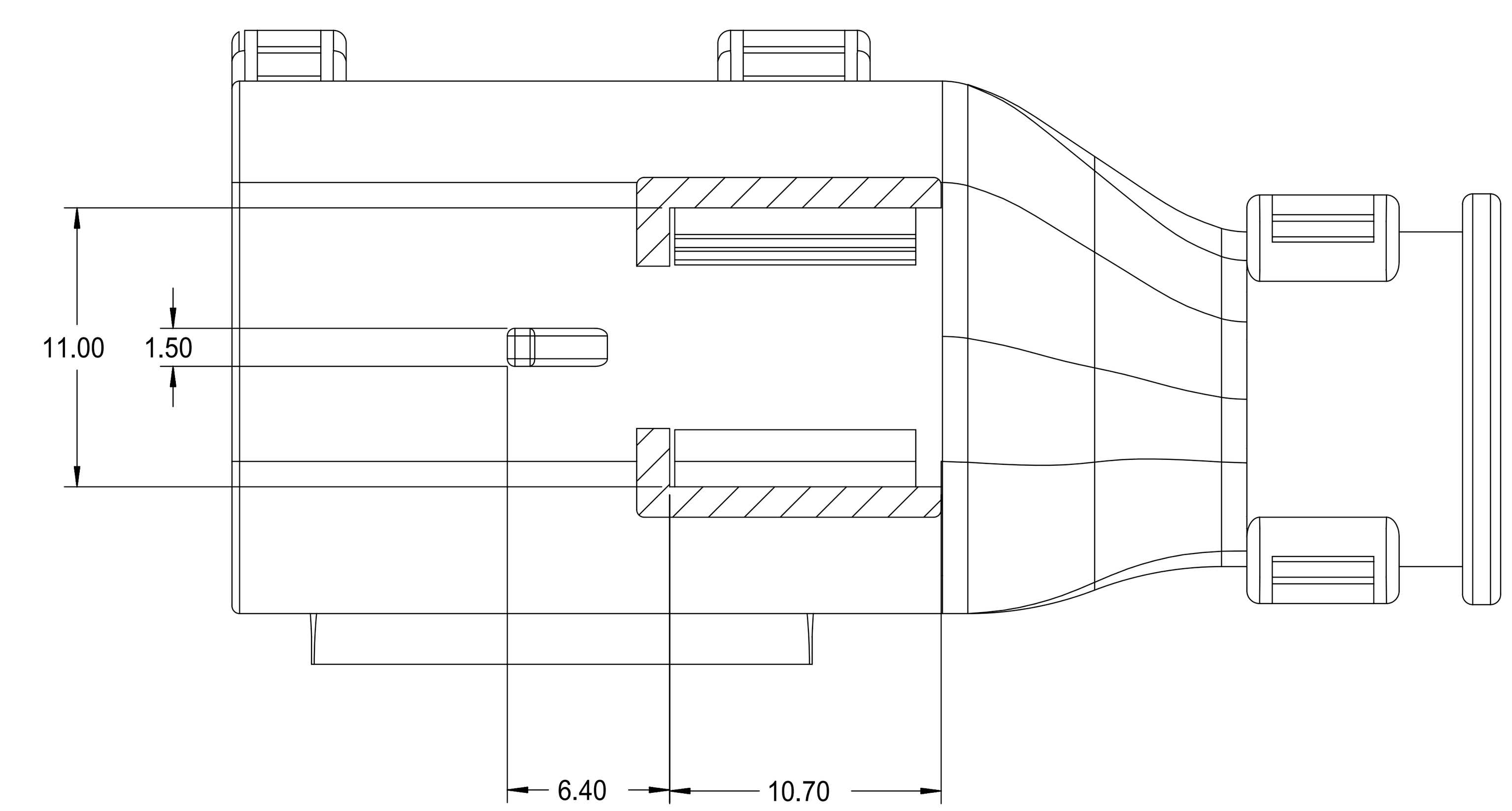
MATERIAL NUMBER	CUSTOMER	SHEET NUMBER
SEE BOM	GENERAL MARKET	4 OF 7

DOCUMENT STATUS	P1	RELEASE DATE	2020/08/26	07:23:55

BACKSHELL
THE VIEWS ON THIS SHEET ARE
IN THE CLOSED UN-ASSEMBLED POSITION







SECTION W-W

THIS DRAWING CONTAINS INFORMATION THAT IS PROPRIETARY TO MOLEX ELECTRONIC TECHNOLOGIES, LLC AND SHOULD NOT BE USED WITHOUT WRITTEN PERMISSION

FUNCTIONAL SYMBOLS	DIMENSION UNITS: mm	SCALE: 4:1
F/A = 0	GENERAL TOLERANCES (UNLESS SPECIFIED)	
F/C = 0	ANGULAR TOL ± 3.0 °	
F/B = 0	4 PLACES ±	
DIVISIONAL SYMBOLS	3 PLACES ±	
	2 PLACES ± 0.1	
	1 PLACE ± 0.3	
	0 PLACES ±	
	DRAFT WHERE APPLICABLE MUST REMAIN WITHIN DIMENSIONS	

CURRENT REV DESC:

EC NO: 643941
DRWN: XLDONG03 2020/08/21
CHK'D: JDENG02 2020/08/26
APPR: JDENG02 2020/08/26

INITIAL REVISION:
DRWN: DMARCOUX 2002/06/18
APPR: FHOLUB 2002/06/18

THIRD ANGLE PROJECTION	DRAWING	SERIES
	D-SIZE	33471

molex

MX150 1X3 RECEPTACLE
SEALED ASSEMBLY MAT SEAL

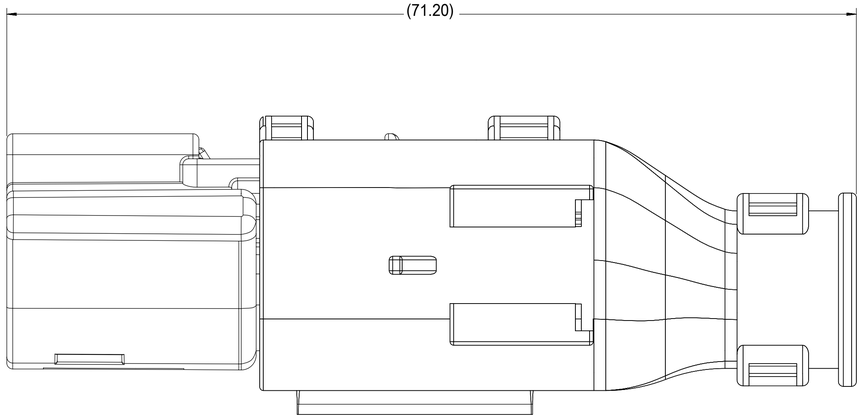
PRODUCT CUSTOMER DRAWING

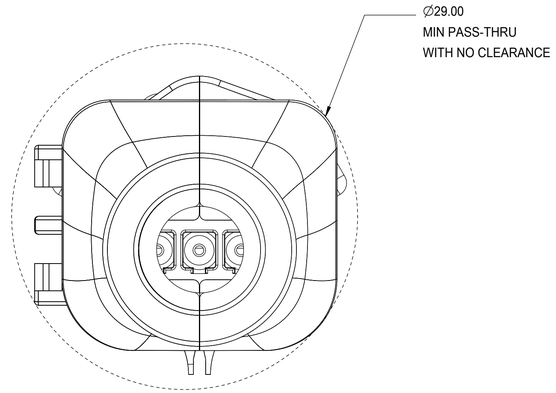
DOCUMENT NUMBER	DOC TYPE	DOC PART	REVISION
SD-33471-031	PSD	001	R

MATERIAL NUMBER	CUSTOMER	SHEET NUMBER
SEE BOM	GENERAL MARKET	5 OF 7

DOCUMENT STATUS	P1	RELEASE DATE	2020/08/26 07:23:55

BACKSHELL CONFIGURATIONS





RECEPTACLE SEALED ASSEMBLY WITH RECEPTACLE BACKSHELL

THIS DRAWING CONTAINS INFORMATION THAT IS PROPRIETARY TO MOLEX ELECTRONIC TECHNOLOGIES, LLC AND SHOULD NOT BE USED WITHOUT WRITTEN PERMISSION

FUNCTIONAL SYMBOLS	FA = 0, FC = 0, FD = 0
DIVISIONAL SYMBOLS	
DIMENSION UNITS	mm
SCALE	4:1
GENERAL TOLERANCES (UNLESS SPECIFIED)	
ANGULAR TOL	± 3.0 °
4 PLACES	±
3 PLACES	±
2 PLACES	± 0.1
1 PLACE	± 0.3
0 PLACES	±
DRAFT WHERE APPLICABLE MUST REMAIN WITHIN DIMENSIONS	

CURRENT REV DESC:

EC NO: 643941
DRWN: XLDONG03 2020/08/21
CHK'D: JDENG02 2020/08/26
APPR: JDENG02 2020/08/26

INITIAL REVISION:
DRWN: DMARCOUX 2002/06/18
APPR: FHOLUB 2002/06/18

molex

MX150 1X3 RECEPTACLE
SEALED ASSEMBLY MAT SEAL

PRODUCT CUSTOMER DRAWING

DOCUMENT NUMBER	DOC TYPE	DOC PART	REVISION
SD-33471-031	PSD	001	R

THIRD ANGLE PROJECTION	DRAWING	SERIES	MATERIAL NUMBER	CUSTOMER	SHEET NUMBER
	D-SIZE	33471	SEE BOM	GENERAL MARKET	6 OF 7

DOCUMENT STATUS	P1	RELEASE DATE	2020/08/26 07:23:55

ASSEMBLY PART NUMBER	COLOR	KEYING OPTION	CAVITY TYPE & STATUS X = PLUGGED			CPA	STATUS	OPTIONAL ATTATCHMENTS SOLD SEPARATELY	
			1	2	3			BACKSHELL WITH RIBS	BACKSHELL WITHOUT RIBS
33471-0301	BLACK	A				-	SALEABLE	34949-0310	34949-0320
33471-0302	LT.GRAY	B				-	SALEABLE	34949-0310	34949-0320
33471-0303	BROWN	C				-	NOT RECOMMENDED--SEE P/N 33471-0343	34949-0310	34949-0320
33471-0304	GREEN	D				-	NOT RECOMMENDED--SEE P/N 33471-0344	34949-0310	34949-0320
~~33471-0305~~						VOIDED			
33471-0306	BLACK	A				YES	SALEABLE	34949-0310	34949-0320
33471-0307	LT.GRAY	B				YES	SALEABLE	34949-0310	34949-0320
33471-0308	BROWN	C				YES	NOT RECOMMENDED--SEE P/N 33471-0340	34949-0310	34949-0320
33471-0309	GREEN	D				YES	NOT RECOMMENDED--SEE P/N 33471-0346	34949-0310	34949-0320
~~33471-0310~~						VOIDED			
33471-0311	BLACK	A			X	-	SALEABLE	34949-0310	34949-0320
33471-0312	LT.GRAY	B			X	-	SALEABLE	34949-0310	34949-0320
33471-0313	BROWN	C			X	-	SALEABLE	34949-0310	34949-0320
33471-0314	GREEN	D			X	-	SALEABLE	34949-0310	34949-0320
~~33471-0315~~						VOIDED			
33471-0316	BLACK	A			X	YES	SALEABLE	34949-0310	34949-0320
33471-0317	LT.GRAY	B			X	YES	SALEABLE	34949-0310	34949-0320
33471-0318	BROWN	C			X	YES	SALEABLE	34949-0310	34949-0320
33471-0319	GREEN	D			X	YES	SALEABLE	34949-0310	34949-0320
~~33471-0320~~						VOIDED			
33471-0321	BLACK	A	X		X	-	SALEABLE	34949-0310	34949-0320
33471-0322	LT.GRAY	B	X		X	-	SALEABLE	34949-0310	34949-0320
33471-0323	BROWN	C	X		X	-	SALEABLE	34949-0310	34949-0320
33471-0324	GREEN	D	X		X	-	SALEABLE	34949-0310	34949-0320
~~33471-0325~~						VOIDED			
33471-0326	BLACK	A	X		X	YES	SALEABLE	34949-0310	34949-0320
33471-0327	LT.GRAY	B	X		X	YES	SALEABLE	34949-0310	34949-0320
33471-0328	BROWN	C	X		X	YES	SALEABLE	34949-0310	34949-0320
33471-0329	GREEN	D	X		X	YES	SALEABLE	34949-0310	34949-0320
~~33471-0330~~						VOIDED			
33471-0331	BLACK	A	X	X	X	-	SALEABLE	34949-0310	34949-0320
33471-0332	LT.GRAY	B	X	X	X	-	SALEABLE	34949-0310	34949-0320
33471-0333	BROWN	C	X	X	X	-	SALEABLE	34949-0310	34949-0320
33471-0334	GREEN	D	X	X	X	-	SALEABLE	34949-0310	34949-0320
~~33471-0335~~						VOIDED			
33471-0336	BLACK	A		X		YES	SALEABLE	34949-0310	34949-0320
33471-0337	BLACK	A		X		-	SALEABLE	34949-0310	34949-0320
33471-0338	BLACK	A	X	X	X	YES	SALEABLE	34949-0310	34949-0320
33471-0339	BLACK	A	X			-	SALEABLE	34949-0310	34949-0320
* 33471-0340	DK.GRAY	C				YES	SALEABLE	34949-0310	34949-0320
33471-0341	LT.GRAY	B		X		YES	SALEABLE	34949-0310	34949-0320
* 33471-0342	DK.GRAY	C		X		YES	SALEABLE	34949-0310	34949-0320
33471-0343	DK.GRAY	C				-	SALEABLE	34949-0310	34949-0320
33471-0344	ST.GRAY	D				-	SALEABLE	34949-0310	34949-0320
33471-0345	DK.GRAY	C				YES	OBSOLETE---SEE P/N 33471-0340	34949-0310	34949-0320
33471-0346	ST.GRAY	D				YES	SALEABLE	34949-0310	34949-0320
33471-0347	YELLOW	A				YES	SALEABLE	34949-0310	34949-0320

*FOR ASSEMBLY P/N'S 33471-0340 AND 33471-0342 REFER TO SALEABLE KEY OPTION C ASSEMBLY P/N'S ABOVE

(Q7)

ASSEMBLY PART NUMBER	COLOR	KEYING OPTION	CAVITY TYPE & STATUS X = PLUGGED			CPA	STATUS	OPTIONAL ATTATCHMENTS SOLD SEPARATELY	
			1	2	3			BACKSHELL WITH RIBS	BACKSHELL WITHOUT RIBS
33471-3301	BLACK	A				-	SALEABLE	34949-0310	34949-0320
33471-3302	LT.GRAY	B				-	SALEABLE	34949-0310	34949-0320
33471-3303	BROWN	C				-	NOT RECOMMENDED--SEE P/N 33471-3343	34949-0310	34949-0320
33471-3304	GREEN	D				-	NOT RECOMMENDED--SEE P/N 33471-3344	34949-0310	34949-0320
~~33471-3305~~						VOIDED			
33471-3306	BLACK	A				YES	SALEABLE	34949-0310	34949-0320
33471-3307	LT.GRAY	B				YES	SALEABLE	34949-0310	34949-0320
33471-3308	BROWN	C				YES	NOT RECOMMENDED--SEE P/N 33471-3340	34949-0310	34949-0320
33471-3309	GREEN	D				YES	NOT RECOMMENDED--SEE P/N 33471-3346	34949-0310	34949-0320
~~33471-3310~~						VOIDED			
33471-3311	BLACK	A			X	-	SALEABLE	34949-0310	34949-0320
33471-3312	LT.GRAY	B			X	-	SALEABLE	34949-0310	34949-0320
33471-3313	BROWN	C			X	-	SALEABLE	34949-0310	34949-0320
33471-3314	GREEN	D			X	-	SALEABLE	34949-0310	34949-0320
~~33471-3315~~						VOIDED			
33471-3316	BLACK	A			X	YES	SALEABLE	34949-0310	34949-0320
33471-3317	LT.GRAY	B			X	YES	SALEABLE	34949-0310	34949-0320
33471-3318	BROWN	C			X	YES	SALEABLE	34949-0310	34949-0320
33471-3319	GREEN	D			X	YES	SALEABLE	34949-0310	34949-0320
~~33471-3320~~						VOIDED			
33471-3321	BLACK	A	X		X	-	SALEABLE	34949-0310	34949-0320
33471-3322	LT.GRAY	B	X		X	-	SALEABLE	34949-0310	34949-0320
33471-3323	BROWN	C	X		X	-	SALEABLE	34949-0310	34949-0320
33471-3324	GREEN	D	X		X	-	SALEABLE	34949-0310	34949-0320
~~33471-3325~~						VOIDED			
33471-3326	BLACK	A	X		X	YES	SALEABLE	34949-0310	34949-0320
33471-3327	LT.GRAY	B	X		X	YES	SALEABLE	34949-0310	34949-0320
33471-3328	BROWN	C	X		X	YES	SALEABLE	34949-0310	34949-0320
33471-3329	GREEN	D	X		X	YES	SALEABLE	34949-0310	34949-0320
~~33471-3330~~						VOIDED			
33471-3331	BLACK	A	X	X	X	-	SALEABLE	34949-0310	34949-0320
33471-3332	LT.GRAY	B	X	X	X	-	SALEABLE	34949-0310	34949-0320
33471-3333	BROWN	C	X	X	X	-	SALEABLE	34949-0310	34949-0320
33471-3334	GREEN	D	X	X	X	-	SALEABLE	34949-0310	34949-0320
~~33471-3335~~						VOIDED			
33471-3336	BLACK	A		X		YES	SALEABLE	34949-0310	34949-0320
33471-3337	BLACK	A		X		-	SALEABLE	34949-0310	34949-0320
33471-3338	BLACK	A	X	X	X	YES	SALEABLE	34949-0310	34949-0320
33471-3339	BLACK	A	X			-	SALEABLE	34949-0310	34949-0320
* 33471-3340	DK.GRAY	C				YES	SALEABLE	34949-0310	34949-0320
33471-3341	LT.GRAY	B		X		YES	SALEABLE	34949-0310	34949-0320
* 33471-3342	DK.GRAY	C		X		YES	SALEABLE	34949-0310	34949-0320
33471-3343	DK.GRAY	C				-	SALEABLE	34949-0310	34949-0320
33471-3344	ST.GRAY	D				-	SALEABLE	34949-0310	34949-0320
33471-3345	DK.GRAY	C				YES	OBSOLETE---SEE P/N 33471-3340	34949-0310	34949-0320
33471-3346	ST.GRAY	D				YES	SALEABLE	34949-0310	34949-0320
33471-3347	YELLOW	A				YES	SALEABLE	34949-0310	34949-0320

*FOR ASSEMBLY P/N'S 33471-3340 AND 33471-3342 REFER TO SALEABLE KEY OPTION C ASSEMBLY P/N'S ABOVE

DOCUMENT STATUS	P1	RELEASE DATE	2020/08/26 07:23:55

THIS DRAWING CONTAINS INFORMATION THAT IS PROPRIETARY TO MOLEX ELECTRONIC TECHNOLOGIES, LLC AND SHOULD NOT BE USED WITHOUT WRITTEN PERMISSION

FUNCTIONAL SYMBOLS: FA = 0; FC = 0; FP = 0

DIVISIONAL SYMBOLS

DIMENSION UNITS: mm

SCALE:

GENERAL TOLERANCES (UNLESS SPECIFIED)

ANGULAR TOL ± 3.0 °

4 PLACES	±
3 PLACES	±
2 PLACES	± 0.1
1 PLACE	± 0.3
0 PLACES	±

DRAFT WHERE APPLICABLE MUST REMAIN WITHIN DIMENSIONS

CURRENT REV DESC:

EC NO: 643941
DRWN: XLDONG03 2020/08/21
CHK'D: JDENG02 2020/08/26
APPR: JDENG02 2020/08/26

INITIAL REVISION:
DRWN: DMARCOUX 2002/06/18
APPR: FHOLUB 2002/06/18

THIRD ANGLE PROJECTION

DRAWING: D-SIZE
SERIES: 33471

molex

MX150 1X3 RECEPTACLE
SEALED ASSEMBLY MAT SEAL

PRODUCT CUSTOMER DRAWING

DOCUMENT NUMBER	DOC TYPE	DOC PART	REVISION
SD-33471-031	PSD	001	R

MATERIAL NUMBER	CUSTOMER	SHEET NUMBER
SEE BOM	GENERAL MARKET	7 OF 7